1. ALL RESISTANCE VALUES ARE IN OHMS, 0.1 WATT +/- 5%.
2. ALL CAPACITANCE VALUES ARE IN MICROFARADS.
3. ALL CRYSTALS & OSCILLATOR VALUES ARE IN HERTZ.

X1536 MLB_COFFEE SCHEMATIC

REV	ECN	DESCRIPTION OF REVISION	CK APPD / DATE
4	0015536938	ENGINEERING RELEASED	2018-12-20

CPAGE	PAGE	CONTENTS	SYNC	DATE
1	1	TABLE OF CONTENTS		
2	2	SYSTEM PCB SUMMARY		
3	4	PD PARTS	J213_ANDRES	07/31/2018
4	5	CPU GFX	J213_AITKEN	08/23/2018
5	6	CPU MISC/JTAG/CFG/RSVD	J213_AITKEN	12/10/2018
6	7	CPU LPDDR3 INTERFACE	J213_AITKEN	08/23/2018
7	8	CPU & PCH POWER	J213_AITKEN	12/19/2018
8	9	CPU & PCH GROUNDS	J213_AITKEN	08/23/2018
9	10	CPU CORE DECOUPLING	J213_AITKEN	08/23/2018
10	11	CPU GT DECOUPLING	J213_AITKEN	08/23/2018
11	12	PCH DECOUPLING	J213_AITKEN	12/11/2018
12	13	PCH AUDIO/LPC/SPI/SMBUS	J213_AITKEN	12/14/2018
13	14	PCH POWER MANAGEMENT	J213_AITKEN	08/23/2018
14	15	PCH PCIE/USB/CLKS	J213_AITKEN	09/18/2018
15	16	PCH SPI/UART/GPIO	J213_AITKEN	08/23/2018
16	18	CPU/PCH MERGED XDP	J213_AITKEN	08/13/2018
17	19	CHIPSET SUPPORT 1	J213_AITKEN	08/13/2018
18	20	CHIPSET SUPPORT 2	J213_AITKEN	12/10/2018
19	22	LPDDR3 VREF MARGINING	J213_JOHN	06/05/2018
20	23	LPDDR3 DRAM CHANNEL A (00-31)	J213_KEI	09/10/2018
21	24	LPDDR3 DRAM CHANNEL A (32-63)	J213_KEI	09/10/2018
22	25	LPDDR3 DRAM CHANNEL B (00-31)	J213_KEI	09/10/2018
23	26	LPDDR3 DRAM CHANNEL B (32-63)	J213_KEI	09/10/2018
24	27	LPDDR3 DRAM TERMINATION	J213_JOHN	06/05/2018
25	28	USB-C HIGH SPEED 1	J213_AMAN	09/18/2018
26	29	USB-C HIGH SPEED 2	J213_AMAN	09/18/2018
27	30	USB-C SUPPORT	J213_AMAN	09/19/2018
28	31	USB-C PORT CONTROLLER A	J213_AMAN	09/19/2018
29	32	USB-C PORT CONTROLLER B	J213_AMAN	08/23/2018
30	33	USB-C CONNECTOR A	J213_AMAN	08/23/2018
31	36	WIFI/BT SUPPORT	J213_METE	07/30/2018
32	37	WIFI/BT MODULE 1	J213_METE	12/03/2018
33	38	WIFI/BT MODULE 2	J213_METE	07/30/2018
34	39	SOC GPIO/SEP/USB/DDR/TEST	J213_KEI	09/11/2018
35	40	SOC AOP/AON/SMC	J213_KEI	12/06/2018
36	41	SOC ISP/I2C/UART/SPI/I2S	J213_KEI	09/11/2018
37	42	SOC PCIE	J213_KEI	09/11/2018
38	43	SOC POWER 1	J213_KEI	09/11/2018
39	44	SOC POWER 2	J213_KEI	09/11/2018
40	45	SOC POWER 3	J213_KEI	09/11/2018
41	46	SOC GROUND	J213_KEI	12/11/2018
42	47	SOC SHARED SUPPORT	J213_KEI	12/11/2018
43	48	SOC PROJECT SUPPORT	J213_KEI	12/10/2018
44	49	T151	J213_AMAN	11/05/2018
45	50	SECURE ELEMENT	J213_KEI	09/11/2018
46	51	T139 SUPPORT	J213_AMAN	08/23/2018
47	52	I2C CONNECTIONS 1	J213_WUDI	09/17/2018
48	53	I2C CONNECTIONS 2	J213_WUDI	09/17/2018
49	54	POWER SENSORS HIGH SIDE	J213_KEI	11/05/2018
50	55	POWER SENSORS LOAD SIDE	J213_KEI	11/05/2018
51	56	POWER SENSORS EXTENDED	J213_KEI	12/06/2018
52	57	POWER SENSORS EXTENDED 2	J213_KEI	12/11/2018
53	58	THERMAL SENSORS	J213_KEI	10/19/2018
54	59	POWER SENSORS EXTENDED 3	J213_KEI	11/05/2018
55	60	FANS/SMC/AMUX SUPPORT	J213_KEI	05/31/2018
56	62	AUDIO PLACEHOLDER	J213_MLB_0P158	05/29/2018
57	63	AUDIO JACK CODEC	J213_MLB_0P158	05/29/2018
58	64	AUDIO LEFT AMPLIFIERS	J213_TROY	12/11/2018
59	65	AUDIO RIGHT AMPLIFIERS	J213_TROY	12/11/2018
60	66	AUDIO FLEX CONNECTORS	J213_KEI	11/26/2018

CPAGE	PAGE	CONTENTS	SYNC	DATE
61	67	KEYBOARD & TRACKPAD 1	J213_AMAN	11/05/2018
62	68	KEYBOARD & TRACKPAD 2	J213_AMAN	08/23/2018
63	69	BATTERY CONN, 3V3 G3H RTC VR	J213_AITKEN	10/22/2018
64	70	PBUS SUPPLY & BATTERY CHARGER	J213_AITKEN	09/18/2018
65	71	VR CORE & SA IMVP CTRL	J213_KEI	09/10/2018
66	72	VR CORE & SA IMVP	J213_KEI	09/10/2018
67	74	VR GT & GTX IMVP	J213_KEI	09/10/2018
68	76	VR 5V, 3V3	J213_JOHN	06/12/2018
69	77	VR EDPIO EDRAM	J213_KEI	09/10/2018
70	78	PMIC BUCKS AND SWS	J213_KEI	11/05/2018
71	79	PMIC LDOS	J213_KEI	10/19/2018
72	80	PMIC GPIOS & CONTROL	J213_KEI	12/19/2018
73	81	VR VDDQ VCCIO	J213_KEI	09/10/2018
74	82	POWER FETS	J213_KEI	09/11/2018
75	84	LCD BACKLIGHT DRIVER	J213_MLB_0P158	05/29/2018
76	85	EDP DISPLAY CONNECTOR	J213_AITKEN	12/11/2018
77	86	S4E<0>	J213_WUDI	09/18/2018
78	87	S4E<1>	J213_WUDI	09/18/2018
79	88	S4E<2>	J213_WUDI	09/18/2018
80	89	S4E<3>	J213_WUDI	09/18/2018
81	90	OCARINA PMIC & NAND VCC VR & VDDIO1 SWCH	J213_WUDI	12/19/2018
82	96	SSD SUPPORT	J213_WUDI	12/19/2018
83	124	FCT	J213_KEI	11/15/2018
84	125	PROBE POINTS	J213_KELVIN	09/24/2018
85	135	DESENSE 1	J213_KELVIN	09/13/2018
86	136	DESENSE 2	J213_KELVIN	09/13/2018
87	137	DESENSE 3	J213_KELVIN	09/12/2018
88	138	DESENSE 4	J213_KELVIN	09/12/2018
89	140	DEV SUPPORT 1	J213_WUDI	12/10/2018
90	141	DEV SUPPORT 2	J213_WUDI	08/23/2018
91	400	BOM CONFIGURATION	J213_JOHN	06/05/2018
92	401	BOM CONFIGURATION	J213_JOHN	06/05/2018
93	403	BOM GROUPS	J213_JOHN	06/05/2018
94	405	BOM VARIANT TABLES	J213_JOHN	06/05/2018
95	406	BOM VARIANT TABLES	J213_JOHN	06/05/2018
96	407	BOM VARIANT TABLES	J213_JOHN	06/05/2018
97	410	BOM ALTERNATES	J213_JOHN	06/05/2018
98	500	BOARD RULES	J213_JOHN	06/05/2018

LAST_MODIFICATION=Thu Dec 20 10:46:56 2018 FAB#AG605

DRAWING TITLE: SCHEM,MLB COFFEE,X1536

Apple Inc.

DRAWING NUMBER: 051-04273 SIZE: D

REVISION: 4.0.0

BRANCH: evt-1

PAGE: 1 OF 500

SHEET: 1 OF 98

NOTICE OF PROPRIETARY PROPERTY:

THE INFORMATION CONTAINED HEREIN IS THE PROPRIETARY PROPERTY OF APPLE INC. THE POSESSOR AGREES TO THE FOLLOWING:
I TO MAINTAIN THIS DOCUMENT IN CONFIDENCE
II NOT TO REPRODUCE OR COPY IT
III NOT TO REVEAL OR PUBLISH IT IN WHOLE OR PART
IV ALL RIGHTS RESERVED

DESIGN	DESCRIPTION	SCHEMATIC	BOARD	MCO	PANEL
J213/MLB_COFFEE	POR CFL MLB	051-04273	820-01598	056-07680-16	057-01595
J213/FLEX_AUDIOJACK	AUDIO JACK, AMR, AND MESA	051-04122	821-02091	056-07548-15	N/A
J680/FLEX_USBC	LEFT SIDE USB TONGUE FLEX	051-03140	821-01646	056-05483-A	N/A
J132/FLEX_BMU_SIGNAL	SIGNALS TO BMU	051-03342	821-01726	056-05589-A	N/A
J79/FLEX_BMU_PWR	POWER TO/FROM BMU	051-00927	821-00447	056-02301-A	N/A
J130/FLEX_TCON_MLB	DISPLAYPORT FROM MLB TO TCON	051-01199	821-00586	056-02785-07	N/A
J213/FLEX_TRACKPAD	MLB TO TRACKPAD	051-04335	821-02218	056-07655-05	N/A
J130/FLEX_KB_3D	KB FLEX FOR ALL 3 KB TYPES	051-02011	821-01046	056-03725-B	N/A
J213/FLEX_3MIC	MIC FLEX	051-04441	821-02265	056-07754-17	N/A
J79/GRAPE_FLEX	DFR TOUCH FLEX	051-01338	821-00681	056-02220-A	N/A
DFR DAUGHTER FLEX	DFR DAUGHTER FLEX	VENDOR	VENDOR	099-14398	N/A
J213/DEV_MLB_COUPON	IMPEDENCE COUPON	951-08932	920-06560	998-16565-01	057-01595

www.laptop-schematics.com

PAGE TITLE
SYSTEM PCB SUMMARY

Apple Inc.

DRAWING NUMBER 051-04273
SIZE D
REVISION 4.0.0
BRANCH evt-1
PAGE 2 OF 500
SHEET 2 OF 98

NOTICE OF PROPRIETARY PROPERTY:
THE INFORMATION CONTAINED HEREIN IS THE PROPRIETARY PROPERTY OF APPLE INC.
THE RECEIPIENT AGREES TO THE FOLLOWING:
I TO MAINTAIN THIS DOCUMENT IN CONFIDENCE
II NOT TO REPRODUCE OR COPY IT
III NOT TO REVEAL OR PUBLISH IT IN WHOLE OR PART
IV ALL RIGHTS RESERVED

TOP SIDE STANDOFFS

OMIT_TABLE
Z0400
2.80D1.2ID-1.44H-SM
CRITICAL
860-01216
SOUTH OF NAND

OMIT_TABLE
Z0401
2.80D1.2ID-1.44H-SM
CRITICAL
860-01216
NORTH OF NAND

OMIT_TABLE
Z0402
2.80D1.2ID-1.44H-SM
CRITICAL
860-01216
NORTH OF NAND

OMIT_TABLE
Z0404
2.80D1.2ID-1.44H-SM
CRITICAL
860-01216
FAR SIDE NEAR AJ CONN

OMIT_TABLE
Z0405
2.80D1.2ID-1.44H-SM
CRITICAL
860-01216
SOUTH OF NAND ALIGNED WITH
BOTTOM SIDE STANDOFF

OMIT_TABLE
Z0406
2.80D1.2ID-1.44H-SM
CRITICAL
860-01216
CORNER OF NAND CLOSEST
TO CPU

BOTTOM SIDE TALL STANDOFF

OMIT_TABLE
Z0460
2.80D1.2ID-3.0H-SM
CRITICAL
860-01215
SOUTH OF NAND ALIGNED WITH
TOP SIDE STANDOFF

USB-C BOSS

CRITICAL
Z0420
3.40D1.75ID-1.12H-SM
860-00392

CRITICAL
Z0421
3.40D1.75ID-1.12H-SM
860-00392

DFR BOSS

CRITICAL
Z0430
6.25X3.85R-1.75ID-1.865H-SM
860-01256

TRACKPAD BOSS

CRITICAL
Z0440
3.50D1.85ID-1.41H-SM
860-00381

CRITICAL
Z0441
3.50D1.85ID-1.41H-SM
860-00381

DISPLAY BOSS

CRITICAL
Z0450
2.7X1.8R-1.4ID-0.91H-SM
860-00469

CRITICAL
Z0451
2.7X1.8R-1.4ID-0.91H-SM
860-00469

AJ FLEX COWLING BOSS

CRITICAL
Z0470
3.50D1.85ID-1.92H-SM
860-00382

POGO PINS BACKLIGHT

CRITICAL
PP0400
POGO-2.30D-4.06H-SM
SM
870-01772

POGO PIN DISPLAY

CRITICAL
PP0420
POGO-2.30D-4.0H-SM
SM
870-01518

POGO PINS DRAM

CRITICAL
PP0410
POGO-2.30D-4.0H-SM
SM
870-01518

CRITICAL
PP0411
POGO-2.30D-4.0H-SM
SM
870-01518

POGO PIN FAN

CRITICAL
PP0430
POGO-2.30D-4.0H-SM
SM
870-01518

POGO PIN HEAT PIPE

CRITICAL
PP0499
POGO-2.30D-4.0H-SM
SM
870-01518

MLB MTG HOLES 2.1X3.36 MM

CRITICAL
ZT0420
TH-NSP
SL-3.36X2.1-5.86X4.6
998-03823
NEAR KEYBOARD CONNECTOR

CRITICAL
ZT0421
TH-NSP
SL-3.36X2.1-5.86X4.6
998-03823
NEAR TRACKPAD CONNECTOR

CPU THERM STAGE HOLES 3.15 MM

CRITICAL
ZT0400
3P0R3P15
998-0845
CORNER NEAREST KEYBOARD

CPU THERM STAGE HOLES 3.6 MM

CRITICAL
ZT0401
4.0R3.6-NSP
998-03850

CRITICAL
ZT0402
4.0R3.6-NSP
998-03850

CRITICAL
ZT0403
4.0R3.6-NSP
998-03850

FAN MTG HOLE 2.0X2.6 MM

CRITICAL
ZT0430
TH-NSP
SL-2.6X2.0-4.7X4.1
998-03974

SHIELD CAN ALIGNMENT SLOTS DRAM

CRITICAL
SL0490
TH-NSP
SL-1.2X0.4-1.5X0.7
998-04440

CRITICAL
SL0491
TH-NSP
SL-1.2X0.4-1.5X0.7
998-04440

2X PLATED SLOTS IN MEM AREA DUE TO
SPACE CONSTRAINTS <RDAR://44382678>
ALL OTHER SHIELD ALIGNMENT SLOTS ARE
NPTH + GND RING FOR BETTER TOLERANCE

USB-C SHIELD

806-19049	1	SHIELD CAN,HOLES,TITAN RIDGE,X1533	USBC_CAN	CRITICAL	USBC_CAN
870-07967	1	TAPE,COND,TITANRIDGE,CAN,X1533	USBC_CAN_TAPE	CRITICAL	USBC_CAN_TAPE
806-18559	1	FENCE,TITAN RIDGE,X1533	USBC_FENCE	CRITICAL	USBC_FENCE
870-07841	1	TAPE,COND,TITANRIDGE,MLB,BTM,X1533	USBC_FENCE_TAPE	CRITICAL	USBC_FENCE_TAPE

MEGA SHIELD

806-19050	1	SHIELD CAN,HOLES,MEGA,X1533	MEGA_CAN	CRITICAL	MEGA_CAN
870-07968	1	TAPE,COND,MEGA,CAN,X1533	MEGA_CAN_TAPE	CRITICAL	MEGA_CAN_TAPE
806-18561	1	FENCE,MEGA,X1533	MEGA_FENCE	CRITICAL	MEGA_FENCE
870-07842	1	TAPE,COND,MEGA,MLB,BTM,X1533	MEGA_FENCE_TAPE	CRITICAL	MEGA_FENCE_TAPE

DRAM SHIELD TOP

806-19048	1	SHIELD CAN,HOLES,DRAM,UNIV,X1533	DRAM_TOP_CAN	CRITICAL	DRAM_TOP_CAN
870-07966	1	TAPE,COND,DRAM,CAN,X1533	DRAM_TOP_CAN_TAPE	CRITICAL	DRAM_TOP_CAN_TAPE
806-18560	1	FENCE,DRAM,UNIV,X1533	DRAM_TOP_FENCE	CRITICAL	DRAM_TOP_FENCE
870-07840	1	TAPE,COND,DRAM,UNIV,X1533	DRAM_TOP_FENCE_TAPE	CRITICAL	DRAM_TOP_FENCE_TAPE

DRAM SHIELD BOTTOM

806-19048	1	SHIELD CAN,HOLES,DRAM,UNIV,X1533	DRAM_BOT_CAN	CRITICAL	DRAM_BOT_CAN
870-07966	1	TAPE,COND,DRAM,CAN,X1533	DRAM_BOT_CAN_TAPE	CRITICAL	DRAM_BOT_CAN_TAPE
806-18560	1	FENCE,DRAM,UNIV,X1533	DRAM_BOT_FENCE	CRITICAL	DRAM_BOT_FENCE
870-07840	1	TAPE,COND,DRAM,UNIV,X1533	DRAM_BOT_TAPE	CRITICAL	DRAM_BOT_TAPE

TOP SIDE STANDOFFS

860-01216	1	BOSS,STANDOFF,MLB,X1533	Z0400-Z0402,Z0404-Z0406	CRITICAL	

BOTTOM SIDE STANDOFFS

860-01215	1	BOSS,STANDOFF,MLB,TALL,X1533	Z0460	CRITICAL	

BOM_COST_GROUP=MECHANICALS

SYNC_MASTER=J213_ANDRES SYNC_DATE=07/31/2018

PAGE TITLE
PD PARTS

Apple Inc.

DRAWING NUMBER 051-04273
SIZE D
REVISION 4.0.0

NOTICE OF PROPRIETARY PROPERTY:
THE INFORMATION CONTAINED HEREIN IS THE PROPRIETARY PROPERTY OF APPLE INC.
THE POSESSOR AGREES TO THE FOLLOWING:
I TO MAINTAIN THIS DOCUMENT IN CONFIDENCE
II NOT TO REPRODUCE OR COPY IT
III NOT TO REVEAL OR PUBLISH IT IN WHOLE OR PART
IV ALL RIGHTS RESERVED

BRANCH evt-1
PAGE 4 OF 500
SHEET 3 OF 98

Vinafix.com

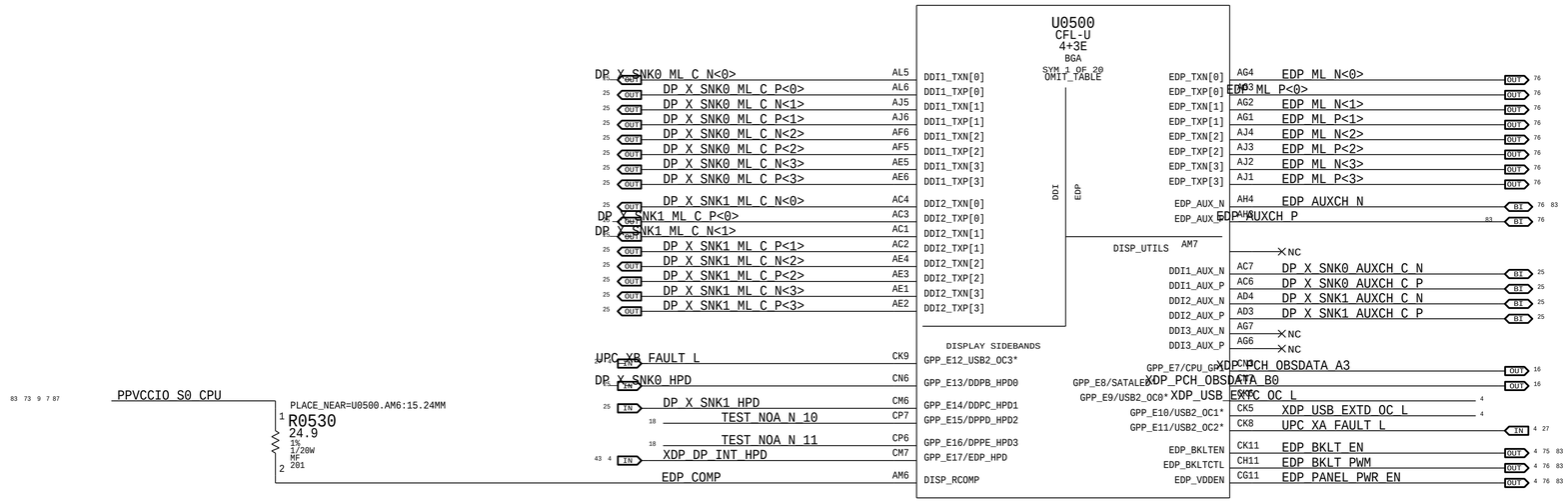

83 73 9 7 87 PPVCCIO_S0_CPU

PLACE_NEAR=U0500.AM6:15.24MM

R0530 24.9 1% 1/20W MF 201

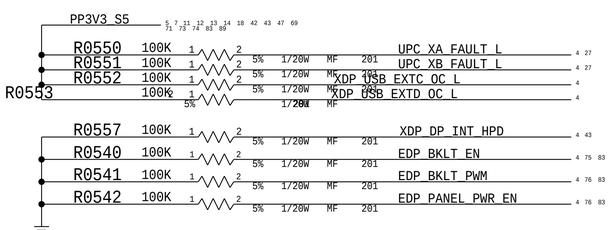

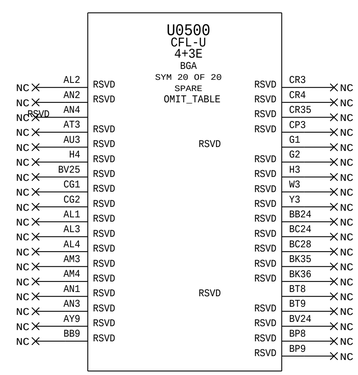

BOM_COST_GROUP=CPU & CHIPSET

PAGE TITLE	CPU GFX
Apple Inc.	DRAWING NUMBER 051-04273 SIZE D
	REVISION 4.0.0
NOTICE OF PROPRIETARY PROPERTY: THE INFORMATION CONTAINED HEREIN IS THE PROPRIETARY PROPERTY OF APPLE INC. THE POSESSOR AGREES TO THE FOLLOWING: I TO MAINTAIN THIS DOCUMENT IN CONFIDENCE II NOT TO REPRODUCE OR COPY IT III NOT TO REVEAL OR PUBLISH IT IN WHOLE OR PART IV ALL RIGHTS RESERVED	BRANCH evt-1
	PAGE 5 OF 500
	SHEET 4 OF 98

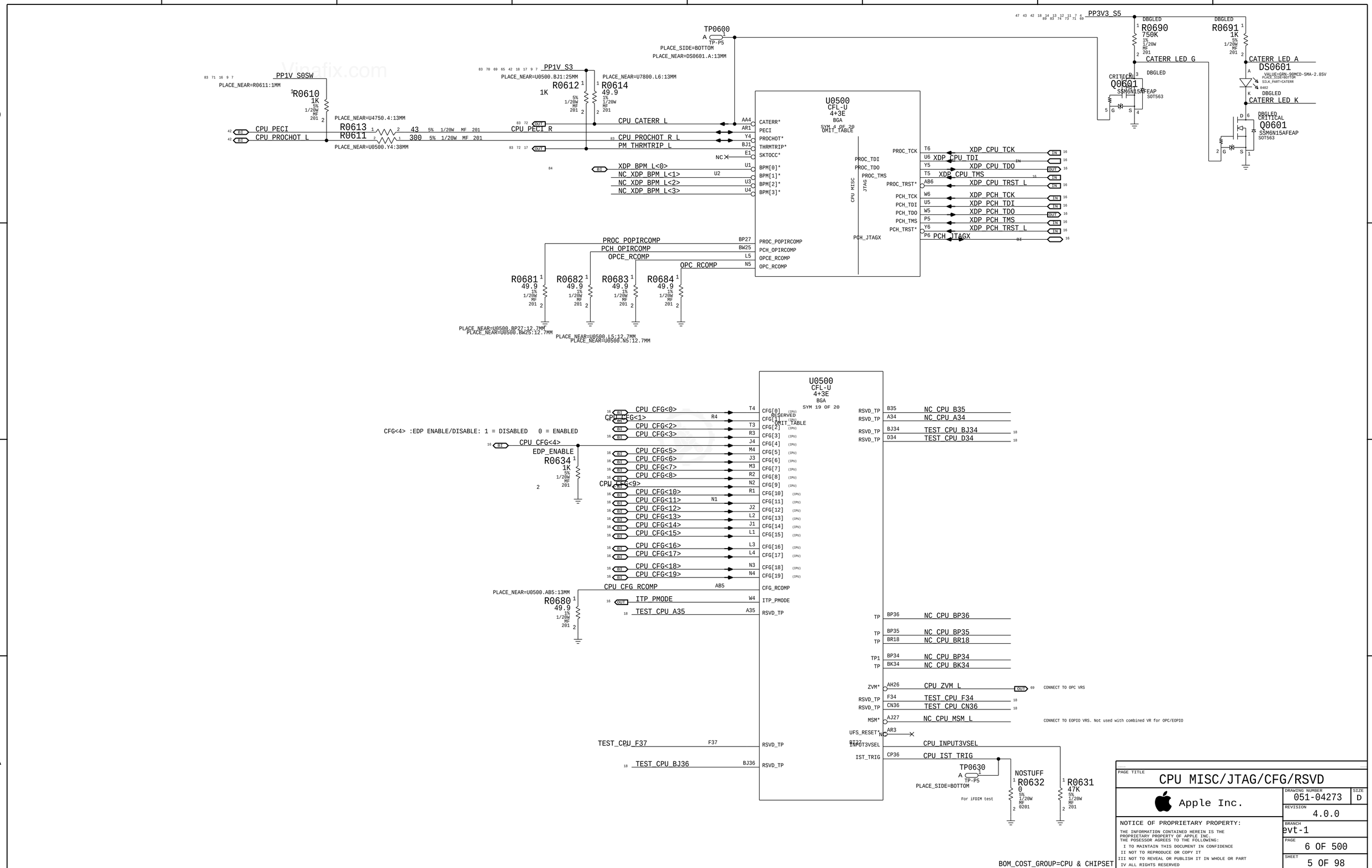

PAGE TITLE
CPU MISC/JTAG/CFG/RSVD

Apple Inc.

DRAWING NUMBER 051-04273 SIZE D
REVISION 4.0.0
BRANCH evt-1
PAGE 6 OF 500
SHEET 5 OF 98

NOTICE OF PROPRIETARY PROPERTY:
THE INFORMATION CONTAINED HEREIN IS THE PROPRIETARY PROPERTY OF APPLE INC.
THE POSESSOR AGREES TO THE FOLLOWING:
I TO MAINTAIN THIS DOCUMENT IN CONFIDENCE
II NOT TO REPRODUCE OR COPY IT
III NOT TO REVEAL OR PUBLISH IT IN WHOLE OR PART
IV ALL RIGHTS RESERVED

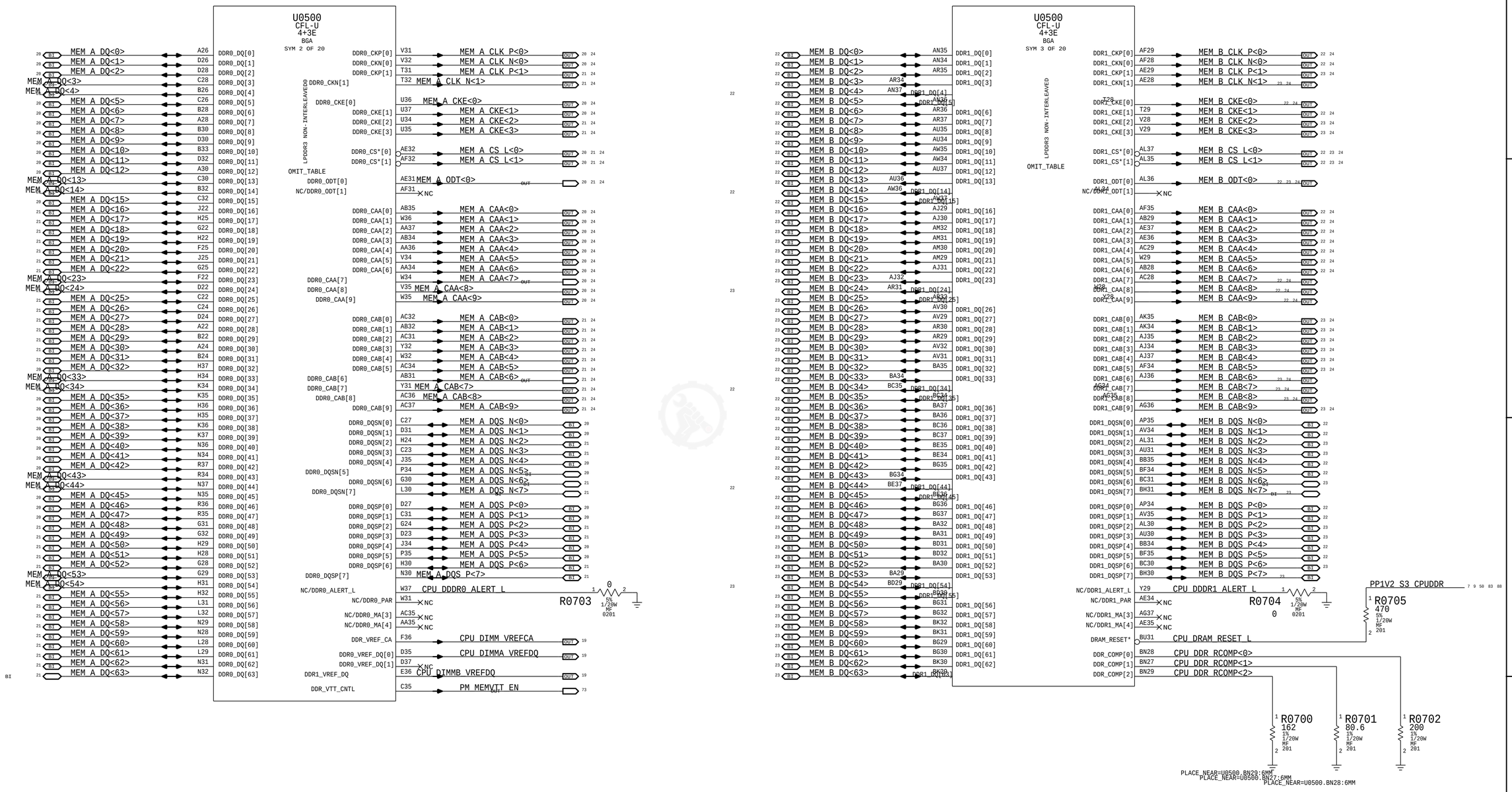

BOM_COST_GROUP=CPU & CHIPSET

PAGE TITLE

CPU LPDDR3 INTERFACE

Apple Inc.

DRAWING NUMBER	051-04273
SIZE	D
REVISION	4.0.0
BRANCH	evt-1
PAGE	7 OF 500
SHEET	6 OF 98

NOTICE OF PROPRIETARY PROPERTY:
THE INFORMATION CONTAINED HEREIN IS THE PROPRIETARY PROPERTY OF APPLE INC.
THE POSESSOR AGREES TO THE FOLLOWING:
I TO MAINTAIN THIS DOCUMENT IN CONFIDENCE
II NOT TO REPRODUCE OR COPY IT
III NOT TO REVEAL OR PUBLISH IT IN WHOLE OR PART
IV ALL RIGHTS RESERVED

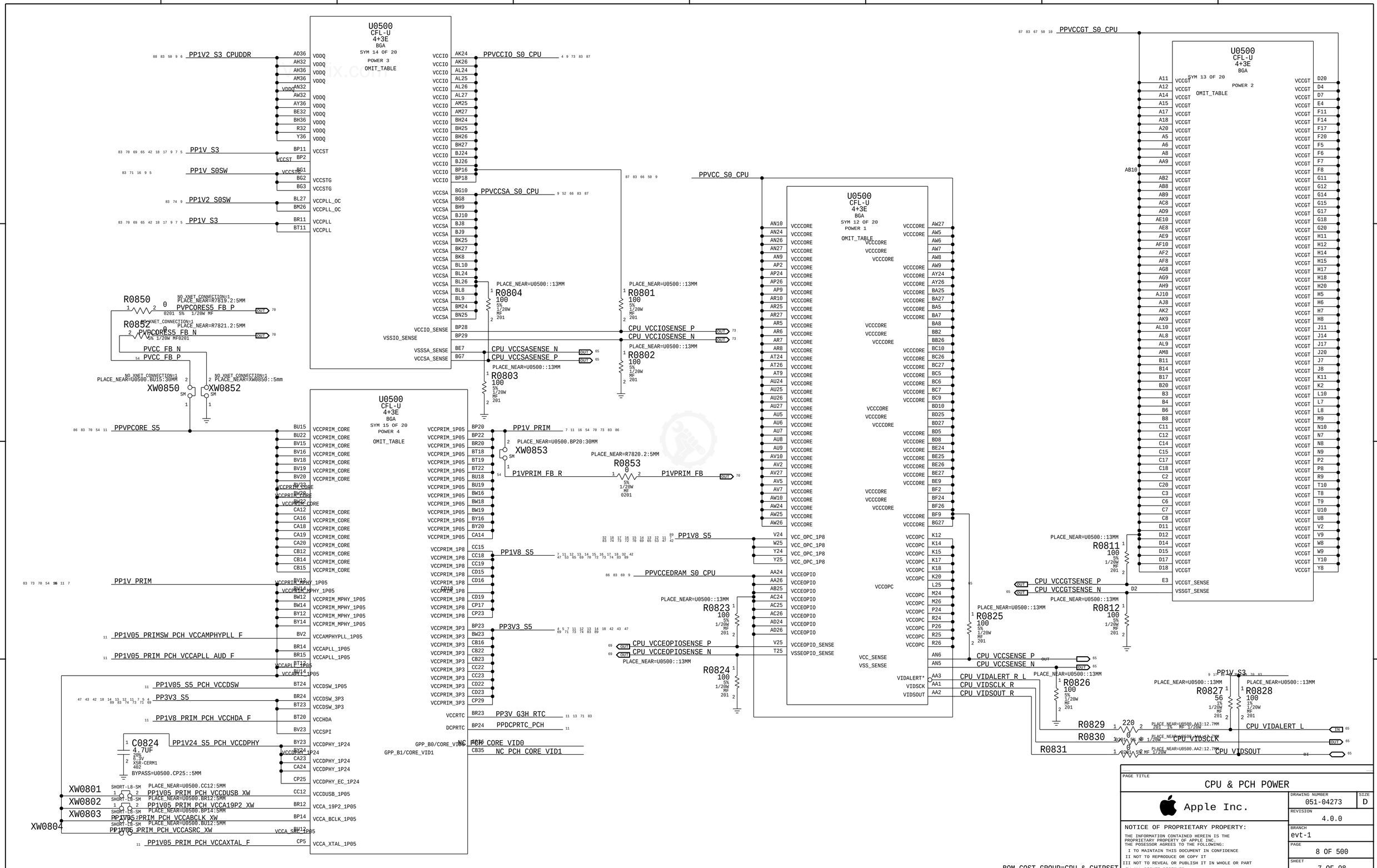

PAGE TITLE	CPU & PCH POWER
Apple Inc.	DRAWING NUMBER 051-04273
	SIZE D
	REVISION 4.0.0
	BRANCH evt-1
	PAGE 8 OF 500
	SHEET 7 OF 98

NOTICE OF PROPRIETARY PROPERTY:
THE INFORMATION CONTAINED HEREIN IS THE PROPRIETARY PROPERTY OF APPLE INC.
THE POSESSOR AGREES TO THE FOLLOWING:
I TO MAINTAIN THIS DOCUMENT IN CONFIDENCE
II NOT TO REPRODUCE OR COPY IT
III NOT TO REVEAL OR PUBLISH IT IN WHOLE OR PART
IV ALL RIGHTS RESERVED

BOM_COST_GROUP=CPU & CHIPSET

Vinafix.com

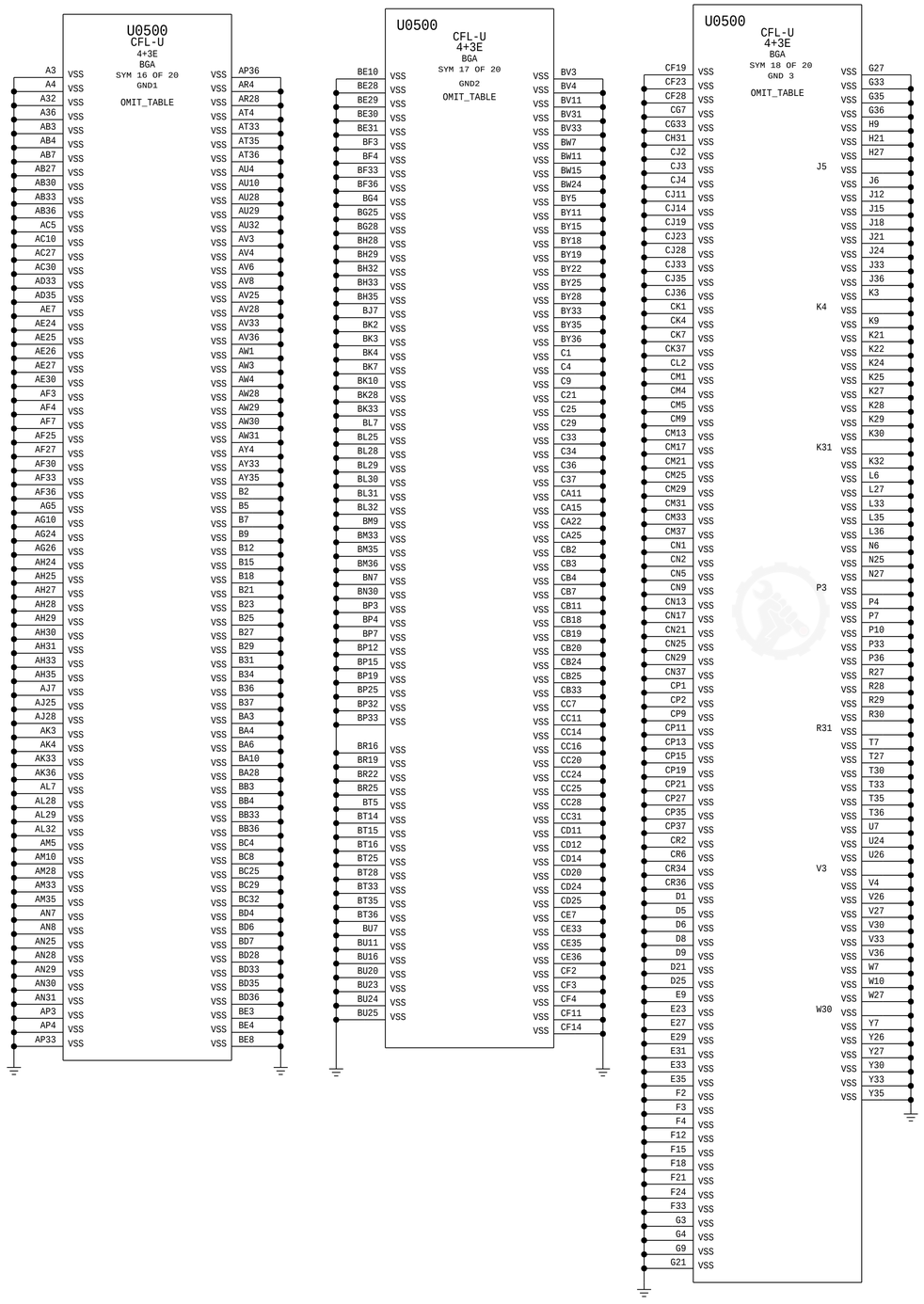

BOM_COST_GROUP=CPU & CHIPSET

PAGE TITLE

CPU & PCH Grounds

Apple Inc.

DRAWING NUMBER 051-04273

SIZE D

REVISION 4.0.0

BRANCH evt-1

PAGE 9 OF 500

SHEET 8 OF 98

NOTICE OF PROPRIETARY PROPERTY:
THE INFORMATION CONTAINED HEREIN IS THE PROPRIETARY PROPERTY OF APPLE INC.
THE POSESSOR AGREES TO THE FOLLOWING:
I TO MAINTAIN THIS DOCUMENT IN CONFIDENCE
II NOT TO REPRODUCE OR COPY IT
III NOT TO REVEAL OR PUBLISH IT IN WHOLE OR PART
IV ALL RIGHTS RESERVED

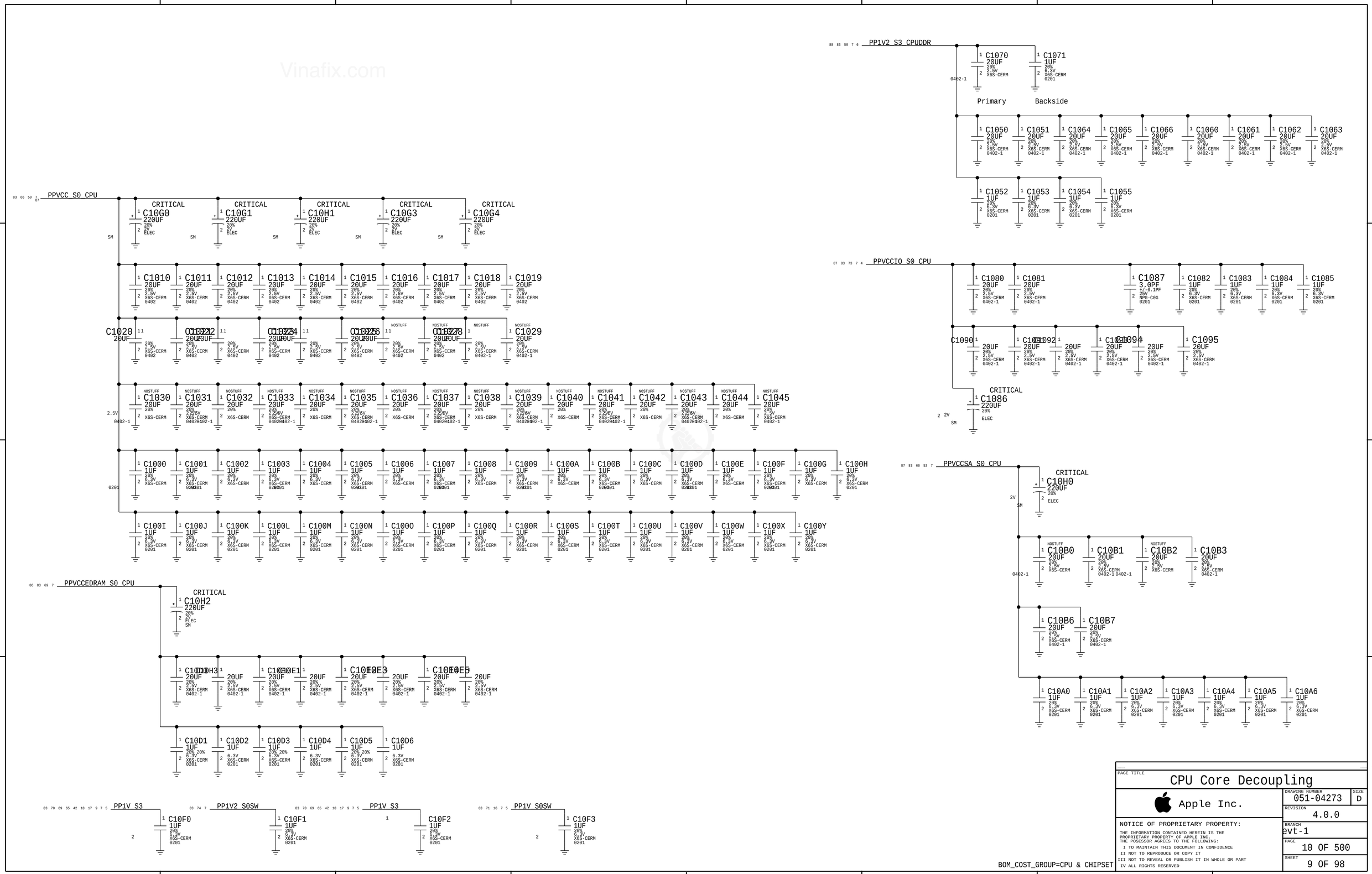
PP1V2_S3_CPUDDR
C1070 20UF 20% 2.5V X6S-CERM 0402-1
C1071 1UF 20% 6.3V X6S-CERM 0201
Primary
Backside
C1050 20UF 20% 2.5V X6S-CERM 0402-1
C1051 20UF 20% 2.5V X6S-CERM 0402-1
C1064 20UF 20% 2.5V X6S-CERM 0402-1
C1065 20UF 20% 2.5V X6S-CERM 0402-1
C1066 20UF 20% 2.5V X6S-CERM 0402-1
C1060 20UF 20% 2.5V X6S-CERM 0402-1
C1061 20UF 20% 2.5V X6S-CERM 0402-1
C1062 20UF 20% 2.5V X6S-CERM 0402-1
C1063 20UF 20% 2.5V X6S-CERM 0402-1
C1052 1UF 20% 6.3V X6S-CERM 0201
C1053 1UF 20% 6.3V X6S-CERM 0201
C1054 1UF 20% 6.3V X6S-CERM 0201
C1055 1UF 20% 6.3V X6S-CERM 0201
PPVCC_S0_CPU
CRITICAL C10G0 220UF 20% 2V ELEC SM
CRITICAL C10G1 220UF 20% 2V ELEC SM
CRITICAL C10H1 220UF 20% 2V ELEC SM
CRITICAL C10G3 220UF 20% 2V ELEC SM
CRITICAL C10G4 220UF 20% 2V ELEC SM
C1010 20UF 20% 2.5V X6S-CERM 0402
C1011 20UF 20% 2.5V X6S-CERM 0402
C1012 20UF 20% 2.5V X6S-CERM 0402
C1013 20UF 20% 2.5V X6S-CERM 0402
C1014 20UF 20% 2.5V X6S-CERM 0402
C1015 20UF 20% 2.5V X6S-CERM 0402
C1016 20UF 20% 2.5V X6S-CERM 0402
C1017 20UF 20% 2.5V X6S-CERM 0402
C1018 20UF 20% 2.5V X6S-CERM 0402
C1019 20UF 20% 2.5V X6S-CERM 0402
C1020 20UF
C1022 20UF
C1024 20UF
C1026 20UF
C1028 20UF
C1029 20UF 20% 2.5V X6S-CERM 0402-1
NOSTUFF
C1030 20UF 20% X6S-CERM
C1031 20UF 20% 2.5V X6S-CERM 0402
C1032 20UF 20% X6S-CERM
C1033 20UF 20% 2.5V X6S-CERM 0402
C1034 20UF 20% X6S-CERM
C1035 20UF 20% 2.5V X6S-CERM 0402
C1036 20UF 20% X6S-CERM
C1037 20UF 20% 2.5V X6S-CERM 0402
C1038 20UF 20% X6S-CERM
C1039 20UF 20% 2.5V X6S-CERM 0402
C1040 20UF 20% X6S-CERM
C1041 20UF 20% 2.5V X6S-CERM 0402
C1042 20UF 20% X6S-CERM
C1043 20UF 20% 2.5V X6S-CERM 0402
C1044 20UF 20% X6S-CERM
C1045 20UF 20% 2.5V X6S-CERM 0402-1
2.5V 0402-1
C1000 1UF 20% 6.3V X6S-CERM 0201
C1001 1UF 20% 6.3V X6S-CERM 0201
C1002 1UF 20% 6.3V X6S-CERM
C1003 1UF 20% 6.3V X6S-CERM 0201
C1004 1UF 20% 6.3V X6S-CERM
C1005 1UF 20% 6.3V X6S-CERM 0201
C1006 1UF 20% 6.3V X6S-CERM
C1007 1UF 20% 6.3V X6S-CERM 0201
C1008 1UF 20% 6.3V X6S-CERM
C1009 1UF 20% 6.3V X6S-CERM 0201
C100A 1UF 20% 6.3V X6S-CERM
C100B 1UF 20% 6.3V X6S-CERM 0201
C100C 1UF 20% 6.3V X6S-CERM
C100D 1UF 20% 6.3V X6S-CERM 0201
C100E 1UF 20% 6.3V X6S-CERM
C100F 1UF 20% 6.3V X6S-CERM 0201
C100G 1UF 20% 6.3V X6S-CERM
C100H 1UF 20% 6.3V X6S-CERM 0201
C100I 1UF 20% 6.3V X6S-CERM 0201
C100J 1UF 20% 6.3V X6S-CERM 0201
C100K 1UF 20% 6.3V X6S-CERM 0201
C100L 1UF 20% 6.3V X6S-CERM 0201
C100M 1UF 20% 6.3V X6S-CERM 0201
C100N 1UF 20% 6.3V X6S-CERM 0201
C100O 1UF 20% 6.3V X6S-CERM 0201
C100P 1UF 20% 6.3V X6S-CERM 0201
C100Q 1UF 20% 6.3V X6S-CERM 0201
C100R 1UF 20% 6.3V X6S-CERM 0201
C100S 1UF 20% 6.3V X6S-CERM 0201
C100T 1UF 20% 6.3V X6S-CERM 0201
C100U 1UF 20% 6.3V X6S-CERM 0201
C100V 1UF 20% 6.3V X6S-CERM 0201
C100W 1UF 20% 6.3V X6S-CERM 0201
C100X 1UF 20% 6.3V X6S-CERM 0201
C100Y 1UF 20% 6.3V X6S-CERM 0201
PPVCCIO_S0_CPU
C1080 20UF 20% 2.5V X6S-CERM 0402-1
C1081 20UF 20% 2.5V X6S-CERM 0402-1
C1087 3.0PF ±7/0.1PF 25V NP0-C0G 0201
C1082 1UF 20% 6.3V X6S-CERM 0201
C1083 1UF 20% 6.3V X6S-CERM 0201
C1084 1UF 20% 6.3V X6S-CERM 0201
C1085 1UF 20% 6.3V X6S-CERM 0201
C1090 20UF 20% 2.5V X6S-CERM 0402-1
C1092 20UF 20% 2.5V X6S-CERM 0402-1
C1094 20UF 20% 2.5V X6S-CERM 0402-1
C1095 20UF 20% 2.5V X6S-CERM 0402-1
CRITICAL C1086 220UF 20% 2V ELEC SM
PPVCCSA_S0_CPU
CRITICAL C10H0 220UF 20% 2V ELEC SM
C10B0 20UF 20% 2.5V X6S-CERM
C10B1 20UF 20% 2.5V X6S-CERM 0402-1
C10B2 20UF 20% 2.5V X6S-CERM
C10B3 20UF 20% 2.5V X6S-CERM 0402-1
0402-1
C10B6 20UF 20% 2.5V X6S-CERM 0402-1
C10B7 20UF 20% 2.5V X6S-CERM 0402-1
C10A0 1UF 20% 6.3V X6S-CERM 0201
C10A1 1UF 20% 6.3V X6S-CERM 0201
C10A2 1UF 20% 6.3V X6S-CERM 0201
C10A3 1UF 20% 6.3V X6S-CERM 0201
C10A4 1UF 20% 6.3V X6S-CERM 0201
C10A5 1UF 20% 6.3V X6S-CERM 0201
C10A6 1UF 20% 6.3V X6S-CERM 0201
PPVCCEDRAM_S0_CPU
CRITICAL C10H2 220UF 20% 2V ELEC SM
C10H3 20UF
C10E1 20UF
C10E3 20UF
C10E5 20UF
C10D1 1UF 20% 6.3V X6S-CERM 0201
C10D2 1UF 6.3V X6S-CERM 0201
C10D3 1UF 20% 6.3V X6S-CERM 0201
C10D4 1UF 6.3V X6S-CERM 0201
C10D5 1UF 20% 6.3V X6S-CERM 0201
C10D6 1UF 6.3V X6S-CERM 0201
PP1V_S3
C10F0 1UF 20% 6.3V X6S-CERM 0201
PP1V2_S0SW
C10F1 1UF 20% 6.3V X6S-CERM 0201
PP1V_S3
C10F2 1UF 20% 6.3V X6S-CERM 0201
PP1V_S0SW
C10F3 1UF 20% 6.3V X6S-CERM 0201
BOM_COST_GROUP=CPU & CHIPSET
PAGE TITLE
CPU Core Decoupling
Apple Inc.
DRAWING NUMBER 051-04273
SIZE D
REVISION 4.0.0
BRANCH evt-1
PAGE 10 OF 500
SHEET 9 OF 98
NOTICE OF PROPRIETARY PROPERTY:
THE INFORMATION CONTAINED HEREIN IS THE PROPRIETARY PROPERTY OF APPLE INC.
THE POSESSOR AGREES TO THE FOLLOWING:
I TO MAINTAIN THIS DOCUMENT IN CONFIDENCE
II NOT TO REPRODUCE OR COPY IT
III NOT TO REVEAL OR PUBLISH IT IN WHOLE OR PART
IV ALL RIGHTS RESERVED

Vinafix.com

87 83 67 58 7 PPVCCGT_S0_CPU

C1162 220UF 20% 2V ELEC SM CRITICAL
C1163 220UF 20% 2V ELEC SM CRITICAL
C1164 220UF 20% 2V ELEC SM CRITICAL
C1190 220UF 20% 2V ELEC SM CRITICAL
C1191 220UF 20% 2V ELEC SM CRITICAL

NOSTUFF C1110 20UF 20% 2.5V X6S-CERM 0402
NOSTUFF C1111 20UF 20% 2.5V X6S-CERM 0402
NOSTUFF C1112 20UF 20% 2.5V X6S-CERM 0402
NOSTUFF C1113 20UF 20% 2.5V X6S-CERM 0402
C1114 20UF 20% 2.5V X6S-CERM 0402
C1115 20UF 20% 2.5V X6S-CERM 0402
C1116 20UF 20% 2.5V X6S-CERM 0402
C1117 20UF 20% 2.5V X6S-CERM 0402
C1118 20UF 20% 2.5V X6S-CERM 0402
C1119 20UF 20% 2.5V X6S-CERM 0402
C1124 20UF 20% 2.5V X6S-CERM 0402
C1125 20UF 20% 2.5V X6S-CERM 0402
C1126 20UF 20% 2.5V X6S-CERM 0402
C1127 20UF 20% 2.5V X6S-CERM 0402
C1128 20UF 20% 2.5V X6S-CERM 0402
C1129 20UF 20% 2.5V X6S-CERM 0402

C1170 20UF 20% 2.5V X6S-CERM 0402
C1171 20UF 20% 2.5V X6S-CERM 0402
C1172 20UF 20% 2.5V X6S-CERM 0402
C1173 20UF 20% 2.5V X6S-CERM 0402
C1174 20UF 20% 2.5V X6S-CERM 0402
C1175 20UF 20% 2.5V X6S-CERM 0402
C1176 20UF 20% 2.5V X6S-CERM 0402
C1177 20UF 20% 2.5V X6S-CERM 0402
C1184 20UF 20% 2.5V X6S-CERM 0402
C1187 20UF 20% 2.5V X6S-CERM 0402

NOSTUFF C1140 20UF 20% 2.5V X6S-CERM 0402-1
NOSTUFF C1141 20UF 20% 2.5V X6S-CERM 0402-1
NOSTUFF C1142 20UF 20% 2.5V X6S-CERM 0402-1
NOSTUFF C1143 20UF 20% 2.5V X6S-CERM 0402-1
NOSTUFF C1144 20UF 20% 2.5V X6S-CERM 0402-1
NOSTUFF C1145 20UF 20% 2.5V X6S-CERM 0402-1
NOSTUFF C1146 20UF 20% 2.5V X6S-CERM 0402-1
NOSTUFF C1147 20UF 20% 2.5V X6S-CERM 0402-1
NOSTUFF C1148 20UF 20% 2.5V X6S-CERM 0402-1
NOSTUFF C1149 20UF 20% 2.5V X6S-CERM 0402-1

NOSTUFF C1150 20UF 20% 2.5V X6S-CERM 0402
NOSTUFF C1151 20UF 20% 2.5V X6S-CERM 0402
NOSTUFF C1152 20UF 20% 2.5V X6S-CERM 0402
NOSTUFF C1153 20UF 20% 2.5V X6S-CERM 0402
NOSTUFF C1154 20UF 20% 2.5V X6S-CERM 0402
NOSTUFF C1155 20UF 20% 2.5V X6S-CERM 0402
NOSTUFF C1156 20UF 20% 2.5V X6S-CERM 0402
NOSTUFF C1157 20UF 20% 2.5V X6S-CERM 0402

C1100 1UF 20% 6.3V X6S-CERM 0201
C1101 1UF 20% 6.3V X6S-CERM 0201
C1102 1UF 20% 6.3V X6S-CERM 0201
C1103 1UF 20% 6.3V X6S-CERM 0201
C1104 1UF 20% 6.3V X6S-CERM 0201
C1105 1UF 20% 6.3V X6S-CERM 0201
C1106 1UF 20% 6.3V X6S-CERM 0201
C1107 1UF 20% 6.3V X6S-CERM 0201
C1108 1UF 20% 6.3V X6S-CERM 0201
C1109 1UF 20% 6.3V X6S-CERM 0201
C110A 1UF 20% 6.3V X6S-CERM 0201
C110B 1UF 20% 6.3V X6S-CERM 0201
C110C 1UF 20% 6.3V X6S-CERM 0201
C110D 1UF 20% 6.3V X6S-CERM 0201
C110E 1UF 20% 6.3V X6S-CERM 0201
C110F 1UF 20% 6.3V X6S-CERM 0201

C110G 1UF 20% 6.3V X6S-CERM 0201
C110H 1UF 20% 6.3V X6S-CERM 0201
C110I 1UF 20% 6.3V X6S-CERM 0201
C110J 1UF 20% 6.3V X6S-CERM 0201
C110K 1UF 20% 6.3V X6S-CERM 0201
C110L 1UF 20% 6.3V X6S-CERM 0201
C110M 1UF 20% 6.3V X6S-CERM 0201
C110N 1UF 20% 6.3V X6S-CERM 0201
C110O 1UF 20% 6.3V X6S-CERM 0201
C110P 1UF 20% 6.3V X6S-CERM 0201
C110Q 1UF 20% 6.3V X6S-CERM 0201
C110R 1UF 20% 6.3V X6S-CERM 0201
C110S 1UF 20% 6.3V X6S-CERM 0201
C110T 1UF 20% 6.3V X6S-CERM 0201
C110U 1UF 20% 6.3V X6S-CERM 0201
C110V 1UF 20% 6.3V X6S-CERM 0201

20% C110W 1UF 6.3V X6S-CERM 0201
C110X 1UF 20% 6.3V X6S-CERM 0201

BOM_COST_GROUP=CPU & CHIPSET

PAGE TITLE
CPU GT Decoupling

Apple Inc.

DRAWING NUMBER 051-04273
SIZE D
REVISION 4.0.0
BRANCH evt-1
PAGE 11 OF 500
SHEET 10 OF 98

NOTICE OF PROPRIETARY PROPERTY:
THE INFORMATION CONTAINED HEREIN IS THE PROPRIETARY PROPERTY OF APPLE INC.
THE POSESSOR AGREES TO THE FOLLOWING:
I TO MAINTAIN THIS DOCUMENT IN CONFIDENCE
II NOT TO REPRODUCE OR COPY IT
III NOT TO REVEAL OR PUBLISH IT IN WHOLE OR PART
IV ALL RIGHTS RESERVED

Vinafix.com

FILTERS

RAIL SIDE | PCH SIDE

PPVPCORE_S5 — NOSTUFF C1200 1UF 20% 6.3V X6S-CERM 0201 — BYPASS=U0500.BV18::3MM

PP1V_PRIM — C1201 1UF 20% 6.3V X6S-CERM 0201 — BYPASS=U0500.BP20::3MM

PP1V_PRIM — CRITICAL C1203 20UF 20% 6.3V CERM-X5R 0402 — BYPASS=U0500.BV12::12MM

PP1V8_S5 — C1205 1UF 20% 6.3V X6S-CERM 0201; NOSTUFF C1206 1UF 20% 6.3V X6S-CERM 0201 — BYPASS=U0500.CP23::3MM — BYPASS=U0500.CP17::3MM

PP3V3_S5 — C1207 3.0PF +/-0.1PF 25V NP0-C0G 0201; NOSTUFF C1208 0.1UF 10% 10V X5R-CERM 0201 — BYPASS=U0500.CP29::3MM — BYPASS=U0500.CD23::7MM

PP3V3_S5 — NOSTUFF C1221 1UF 20% 6.3V X6S-CERM 0201 — BYPASS=U0500.BR24::3MM

PP1V05_S5_PCH_VCCDSW (MIN_LINE_WIDTH=0.2000, MIN_NECK_WIDTH=0.1000) — C1232 1UF 20% 6.3V X6S-CERM 0201 — BYPASS=U0500.BT24::3MM

PP3V_G3H_RTC — C1227 1UF 20% 6.3V X6S-CERM 0201; C1228 0.1UF 10% 10V X5R-CERM 0201 — BYPASS=U0500.BR23::3MM — BYPASS=U0500.BR23::3MM

PPDCPRTC_PCH (MIN_LINE_WIDTH=0.2000, MIN_NECK_WIDTH=0.1000) — C1231 0.1UF 10% 10V X5R-CERM 0201 — BYPASS=U0500.BP24::3MM

PP1V8_S5 — L1260 220-OHM-0.7A-0.28-OHM 0402-1 U0500.BT20::10mm — C1265 3.0PF +/-0.1PF 25V NP0-C0G 0201; C1226 2.0PF +/-0.1PF 25V C0G-CERM 0201; C1260 4.7UF 20% 6.3V X5R-CERM1 402 — BYPASS=U0500.BT20::10MM — BYPASS=U0500.BT20::10mm — MIN_LINE_WIDTH=0.2000, MIN_NECK_WIDTH=0.1000 — PP1V8_PRIM_PCH_VCCHDA_F

PP1V_PRIM — L1261 220-OHM-0.7A-0.28-OHM 0402-1 U0500.BR15::3mm — C1267 3.0PF +/-0.1PF 25V NP0-C0G 0201; C1262 2.0PF +/-0.1PF 25V C0G-CERM 0201; C1261 4.7UF 20% 6.3V X5R-CERM1 402 — BYPASS=U0500.BR15::3MM — BYPASS=U0500.BR15::3mm — MIN_LINE_WIDTH=0.2000, MIN_NECK_WIDTH=0.1000 — PP1V05_PRIM_PCH_VCCAPLL_AUD_F

PP1V_PRIM — R1250 0 5% 1/16W MF-LF 402 — CRITICAL C1250 20UF 20% 6.3V CERM-X5R 0402; CRITICAL C1251 20UF 20% 6.3V CERM-X5R 0402; C1252 1UF 20% 6.3V X6S-CERM 0201 — BYPASS=U0500.BV2::3MM — BYPASS=U0500.BV2::4MM — BYPASS=U0500.BV2::5MM — MIN_LINE_WIDTH=0.2000, MIN_NECK_WIDTH=0.1000 — PP1V05_PRIMSW_PCH_VCCAMPHYPLL_F

PP1V_PRIM — R1253 0 5% 1/16W MF-LF 402 — CRITICAL C1253 20UF 20% 6.3V CERM-X5R 0402; CRITICAL C1254 20UF 20% 6.3V CERM-X5R 0402; C1255 1UF 20% 6.3V X6S-CERM 0201 — BYPASS=U0500.CP5::3MM — BYPASS=U0500.CP5::3MM — BYPASS=U0500.CP5::3MM — MIN_LINE_WIDTH=0.2000, MIN_NECK_WIDTH=0.1000 — PP1V05_PRIM_PCH_VCCAXTAL_F

BOM_COST_GROUP=CPU & CHIPSET

PAGE TITLE	PCH Decoupling
	Apple Inc.
DRAWING NUMBER	051-04273
SIZE	D
REVISION	4.0.0
BRANCH	evt-1
PAGE	12 OF 500
SHEET	11 OF 98

NOTICE OF PROPRIETARY PROPERTY:
THE INFORMATION CONTAINED HEREIN IS THE PROPRIETARY PROPERTY OF APPLE INC.
THE POSESSOR AGREES TO THE FOLLOWING:
I TO MAINTAIN THIS DOCUMENT IN CONFIDENCE
II NOT TO REPRODUCE OR COPY IT
III NOT TO REVEAL OR PUBLISH IT IN WHOLE OR PART
IV ALL RIGHTS RESERVED

Vinafix.com

MEMORY CONFIGURATION STRAPS:

(PCH INTERNAL PULL-UPS ARE TO 1.8V)

MLB_RAMCFG0
MLB_RAMCFG1
MLB_RAMCFG2
MLB_RAMCFG3
MLB_RAMCFG4

RAMCFG4_L	R1334	1K	5% 1/20W MF 201
RAMCFG3_L	R1333	1K	5% 1/20W MF 201
RAMCFG2_L	R1332	1K	5% 1/20W MF 201
RAMCFG1_L	R1331	1K	5% 1/20W MF 201
RAMCFG0_L	R1330	1K	5% 1/20W MF 201

ALL GPP_F* PINS ARE 1.8V ONLY!

U0500
CFL-U
4+3E
BGA
SYM 7 OF 20
OMIT_TABLE

Signal	Pin
NC_PCH_I2S0_SYNC	BN34
NC_PCH_I2S0_CLK	BN37
NC_HDA_SDOUT	BN36
NC_PCH_I2S0_D2R	BN35
NC_PCH_I2S1_CLK	BL35
NC_PCH_GPP_D17	CK25
JTAG_TBT_X_TMS	CC8
PCH_DDPB_CTRLDATA	CC9
JTAG_TBT_T_TMS	CH4
PCH_DDPC_CTRLDATA	CH3
MLB_RAMCFG0	CM24
MLB_RAMCFG1	CN23
NC_PCH_GPP_D11	CM22
PCH_STRP_JTAGODTDIS	CP22
NC_PCH_STRP_TOPBLK_SWP_L	CF35
NC_PCH_GPP_F0	CP20
NC_PCH_GPP_F1	CK19
NC_PCH_GPP_F2	CG17
NC_PCH_GPP_F3	CN20
NC_PCH_I2C_UPC_SDA	CF27
NC_PCH_I2C_UPC_SCL	CF29
NC_PCH_GPP_H6	CH27
NC_PCH_GPP_H7	CH28
NC_PCH_GPP_H8	CJ30
NC_PCH_GPP_H9	CJ31
NC_PCH_GPP_H10	CJ27
NC_PCH_GPP_H11	CJ29

Signal	Pin
NC_PCH_GPP_F18	CP14
NC_PCH_GPP_F19	CM18
NC_PCH_GPP_F20	CM16
NC_PCH_GPP_F21	CP16
NC_PCH_GPP_F22	CN16
NC_PCH_GPP_F23	CF17
TBT_X_CIO_PWR_EN	CH36
TBT_X_USB_PWR_EN	CL35
NC_PCH_GPP_A17	BW36
NC_PCH_GPP_A16	BY34
SD_RCOMP	CK33
NC_PCH_GPP_F17	CR18
JTAG_ISP_TCK	CR28
JTAG_ISP_TDI	CP28
JTAG_ISP_TDO	CN28
TBT_POC_RESET	CM28
NC_PCH_GPP_H16	CR26
NC_PCH_DDPF_CTRLDATA	CP26
CPU_C10_GATE_L	CN27
PCH_WLAN_AUDIO_SYNC	CM27
NC_PCH_GPP_H20	CR24
PCH_STRP_XTAL_24MHZ	CF24
NC_PCH_GPP_H22	CN26
PCH_STRP_SPIROM_SAF	CM26

R1370 200 1% 1/20W MF 201 — PLACE_NEAR=U0500.CK33:12.7MM

U0500
CFL-U
4+3E
BGA
SYM 5 OF 20
OMIT_TABLE

Signal	Pin
TP_SPI_PCHROM_CLK	CH37
NC_SPI_PCHROM_MISO	CF37
SPI_PCHROM_MOSI	CF36
SPI_PCHROM_IO<2>	CF34
SPI_PCHROM_IO<3>	CG34
TP_SPI_PCHROM_CS_L	CG36
NC_SPI_CS1_L	CG35
NC_SPI_CS2_L	CH34
PCH_UART_DEBUG_D2R	CR12
PCH_UART_DEBUG_R2D	CP12
NC_PCH_GPP_C22	CN12
PCH_UART2_CTS_L	CM12
MLB_RAMCFG2	CM23
MLB_RAMCFG3	CR24
MLB_RAMCFG4	CG23
PCH_BT_AUDIO_SYNC	BV29
PCH_GPP_A6	BV28

Signal	Pin
SMBUS_PCH_CLK	CK14
SMBUS_PCH_DATA	CH15
NC_PCH_STRP_TLSCONF	CJ15
SML_PCH_0_CLK	CH14
SML_PCH_0_DATA	CF15
PCH_STRP_ESPI	CG15
SML_PCH_1_CLK	CN15
SML_PCH_1_DATA	CM15
NC_PCH_STRP_BSSB_SEL_GPIO	CG16
ESPI_IO_PCH<0>	CA29
ESPI_IO_PCH<1>	BY29
ESPI_IO_PCH<2>	BV27
ESPI_IO_PCH<3>	BV27
ESPI_CS_PCH_L	CA28
ESPI_RESET_L	CA27
ESPI_CLK60M_R	BV32
NC_PCH_GPP_A10	BW32
NC_PCH_GPP_A8	BY32

R1320	20	5% 1/20W MF 201	ESPI_IO<0>
R1321	20	5% 1/20W MF 201	ESPI_IO<1>
R1322	20	5% 1/20W MF 201	ESPI_IO<2>
R1323	20	5% 1/20W MF 201	ESPI_IO<3>
R1324	20	5% 1/20W MF 201	ESPI_CS_L
R1327	22	5% 1/20W MF 201	ESPI_CLK60M

PP3V3_S5

R1399	1K	NOSTUFF	PCH_STRP_SPIROM_SAF
R1346	100K		PCH_STRP_JTAGODTDIS
R1355	10K		JTAG_TBT_X_TMS
R1356	10K		JTAG_TBT_T_TMS
R1359	10K		JTAG_ISP_TDO
R1347	100K		CPU_C10_GATE_L
R1366	100K		SPI_PCHROM_MOSI
R1367	100K		SPI_PCHROM_IO<2>
R1368	100K		SPI_PCHROM_IO<3>
R1340	2.2K		PCH_DDPB_CTRLDATA
R1341	2.2K		PCH_DDPC_CTRLDATA
R1358	10K	NOSTUFF	

ENABLE DPPB/C INTERFACES

PP1V8_S5

R1344	100K	NOSTUFF	PCH_BT_AUDIO_SYNC
R1345	1K		PCH_STRP_ESPI
R1352	47K		PCH_UART_DEBUG_D2R
R1353	47K		PCH_UART_DEBUG_R2D
R1363	1K		PCH_STRP_SPIROM_SAF
R1365	1K		PCH_STRP_XTAL_24MHZ
R1348	100K		ESPI_IO<0>
R1349	100K		ESPI_IO<1>
R1350	100K		ESPI_IO<2>
R1351	100K		ESPI_IO<3>
R1357	100K		ESPI_CS_L
R1369	100K	NOSTUFF	PCH_WLAN_AUDIO_SYNC
R1375	2.2K		SML_PCH_1_CLK
R1376	2.2K		SML_PCH_1_DATA

PM_SLP_S3_L

R1371	100K		TBT_X_CIO_PWR_EN
R1372	100K		TBT_X_USB_PWR_EN
R1360	100K		JTAG_ISP_TCK
R1361	100K		JTAG_ISP_TDI
R1354	47K		PCH_UART2_CTS_L
R1362	100K		TBT_POC_RESET
R1364	100K		PCH_WLAN_AUDIO_SYNC
R1374	100K		PCH_BT_AUDIO_SYNC

ESPI ANALYZER CONNECTOR

516S00115
505070-1222
J1301 M-ST-SM

ESPI_IO<0>	R1380	43	ESPI_IO_DBG<0>	ESPI_DBG
ESPI_IO<1>	R1381	43	ESPI_IO_DBG<1>	ESPI_DBG
ESPI_IO<2>	R1382	43	ESPI_IO_DBG<2>	ESPI_DBG
ESPI_IO<3>	R1383	43	ESPI_IO_DBG<3>	ESPI_DBG
ESPI_CS_L	R1384	43	ESPI_DBG_CS_L	ESPI_DBG

ESPI_RESET_L
ESPI_CLK60M_DBG — R1385 43 201 MF 1/20W 5% — ESPI_CLK60M

BOM_COST_GROUP=CPU & CHIPSET

PAGE TITLE	PCH AUDIO/LPC/SPI/SMBUS
Apple Inc.	DRAWING NUMBER 051-04273 SIZE D
	REVISION 4.0.0
	BRANCH evt-1
	PAGE 13 OF 500
	SHEET 12 OF 98

NOTICE OF PROPRIETARY PROPERTY:
THE INFORMATION CONTAINED HEREIN IS THE PROPRIETARY PROPERTY OF APPLE INC.
THE POSESSOR AGREES TO THE FOLLOWING:
I TO MAINTAIN THIS DOCUMENT IN CONFIDENCE
II NOT TO REPRODUCE OR COPY IT
III NOT TO REVEAL OR PUBLISH IT IN WHOLE OR PART
IV ALL RIGHTS RESERVED

Vinafix.com

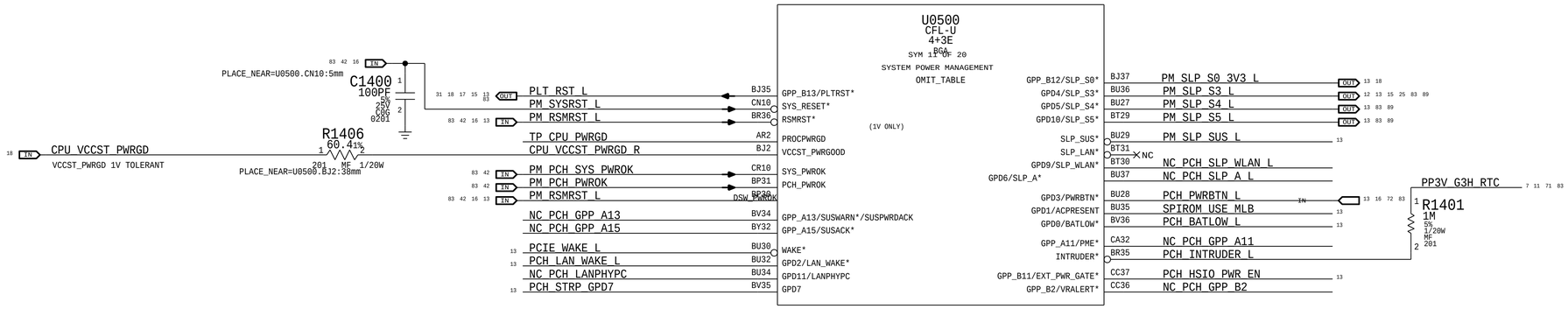

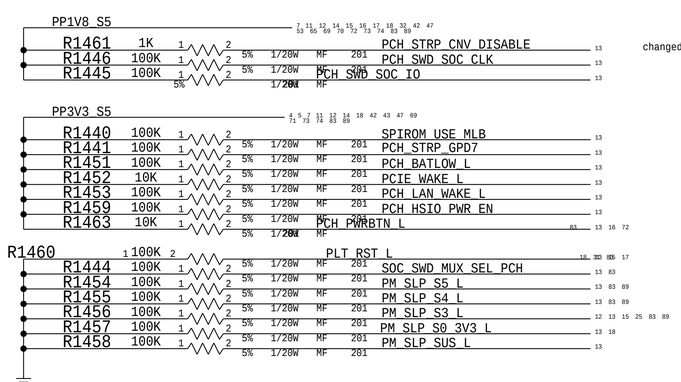

NOTE: =PM_SLP_S0_L HAS INTERNAL PULL-UP BEFORE RSMRST_L IS RELEASED.
THIS CAUSES A VOLTAGE DIVIDER WITH THE PULL-DOWN HERE.
THE SIGNAL IS DRIVEN HI AFTER RSMRST_L IS RELEASED.

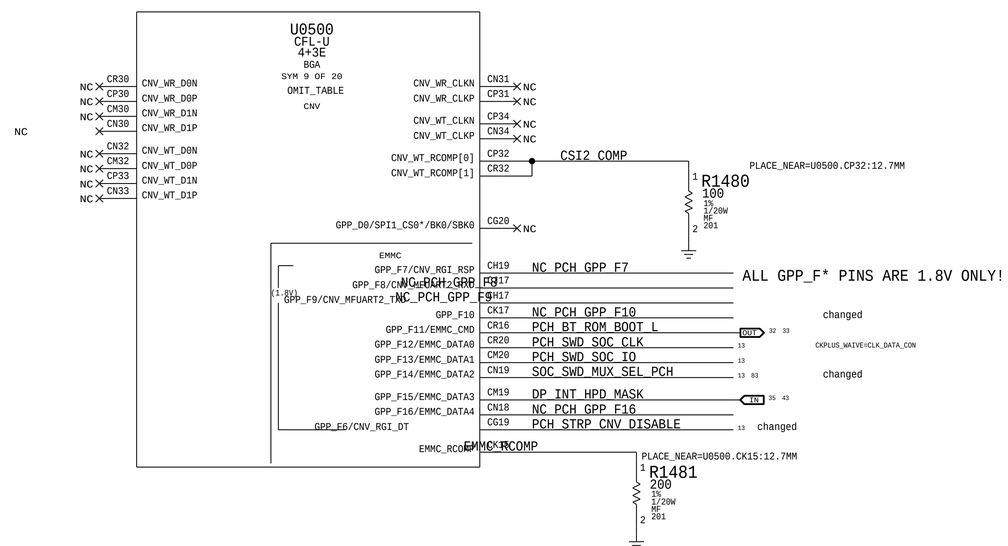

BOM_COST_GROUP=CPU & CHIPSET

PAGE TITLE
PCH POWER MANAGEMENT

Apple Inc.

DRAWING NUMBER 051-04273 SIZE D
REVISION 4.0.0
BRANCH evt-1
PAGE 14 OF 500
SHEET 13 OF 98

NOTICE OF PROPRIETARY PROPERTY:
THE INFORMATION CONTAINED HEREIN IS THE PROPRIETARY PROPERTY OF APPLE INC.
THE POSESSOR AGREES TO THE FOLLOWING:
I TO MAINTAIN THIS DOCUMENT IN CONFIDENCE
II NOT TO REPRODUCE OR COPY IT
III NOT TO REVEAL OR PUBLISH IT IN WHOLE OR PART
IV ALL RIGHTS RESERVED

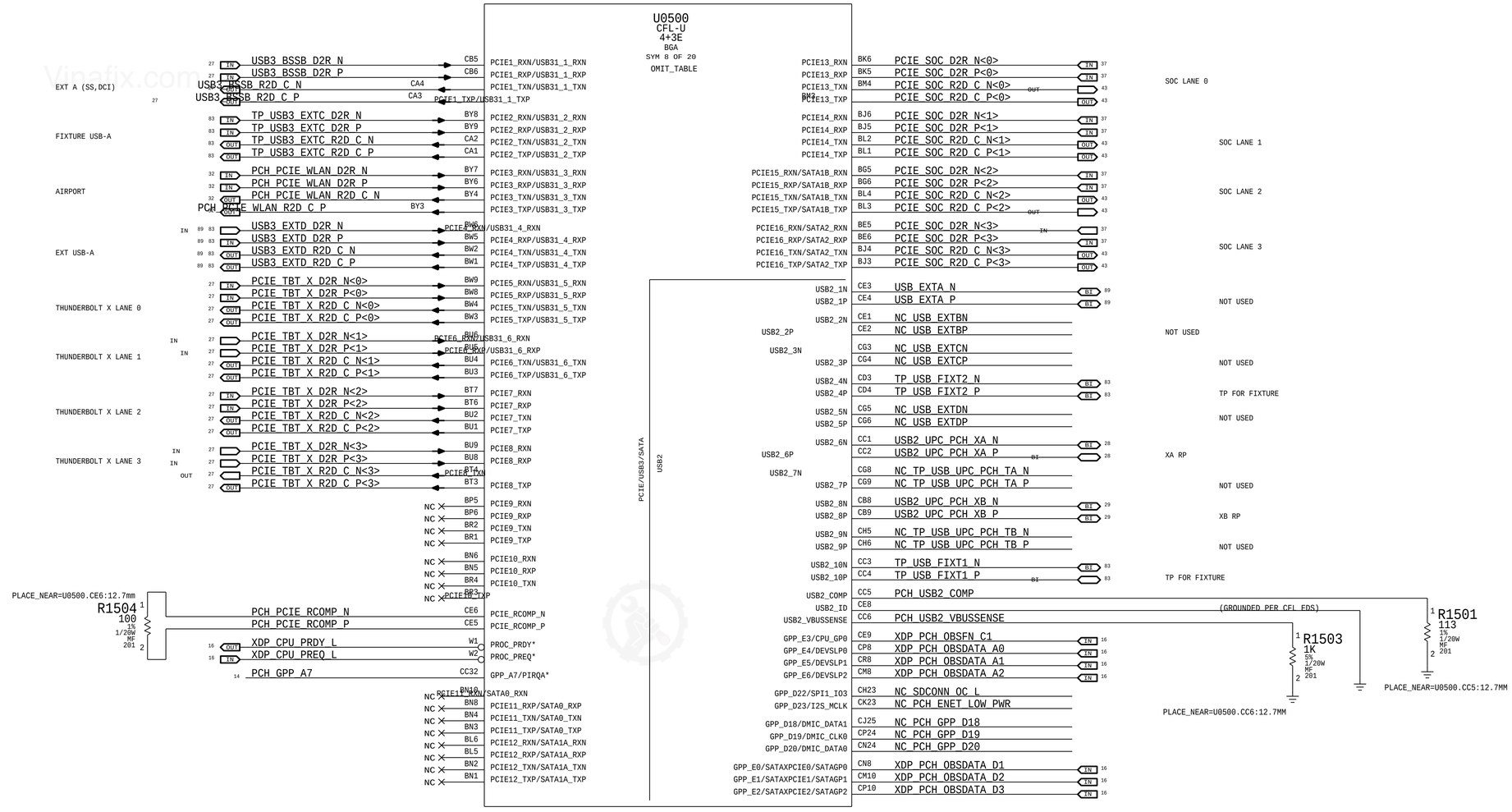

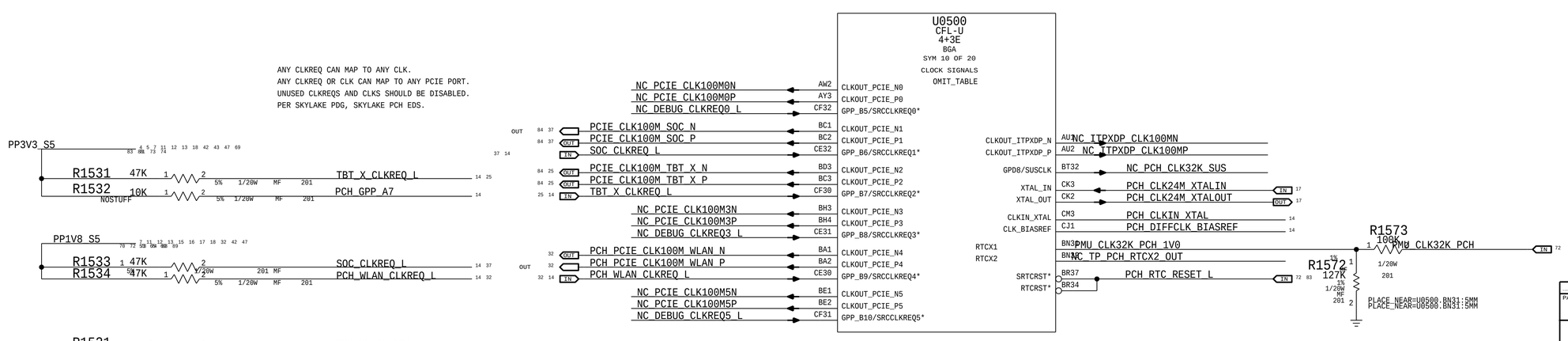

BOM_COST_GROUP=CPU & CHIPSET

PAGE TITLE
PCH PCIE/USB/CLKS

Apple Inc.

DRAWING NUMBER 051-04273 | SIZE D
REVISION 4.0.0
BRANCH evt-1
PAGE 15 OF 500
SHEET 14 OF 98

NOTICE OF PROPRIETARY PROPERTY:
THE INFORMATION CONTAINED HEREIN IS THE PROPRIETARY PROPERTY OF APPLE INC.
THE POSESSOR AGREES TO THE FOLLOWING:
I TO MAINTAIN THIS DOCUMENT IN CONFIDENCE
II NOT TO REPRODUCE OR COPY IT
III NOT TO REVEAL OR PUBLISH IT IN WHOLE OR PART
IV ALL RIGHTS RESERVED

Vinafix.com

ALL GPP_F* PINS ARE 1.8V ONLY!

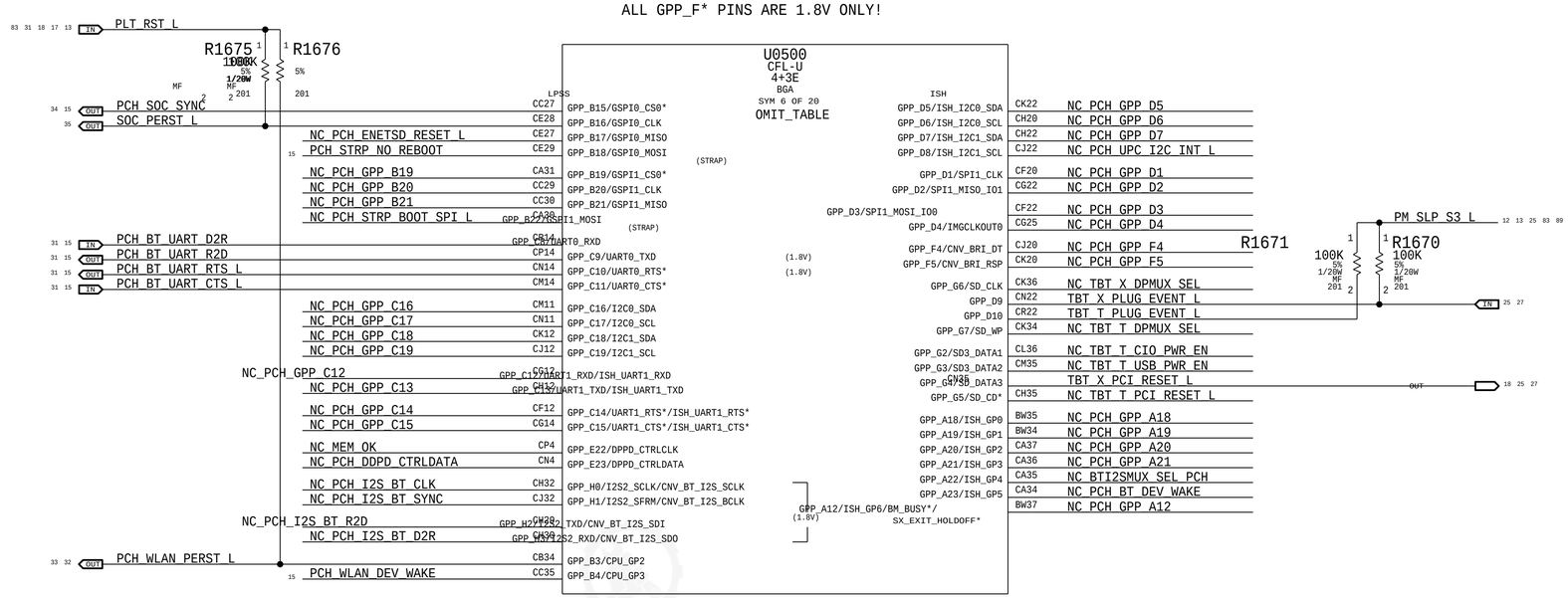

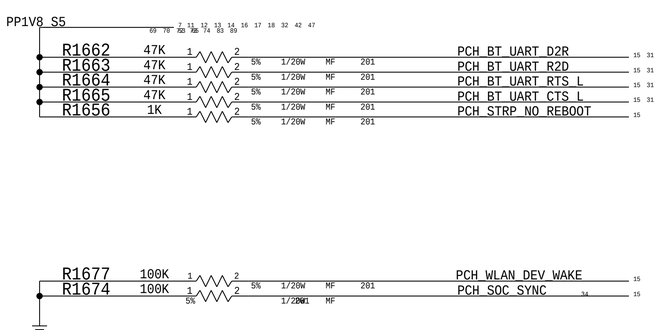

BOM_COST_GROUP=CPU & CHIPSET

PAGE TITLE
PCH SPI/UART/GPIO

Apple Inc.

DRAWING NUMBER 051-04273
SIZE D
REVISION 4.0.0
BRANCH evt-1
PAGE 16 OF 500
SHEET 15 OF 98

NOTICE OF PROPRIETARY PROPERTY:
THE INFORMATION CONTAINED HEREIN IS THE PROPRIETARY PROPERTY OF APPLE INC.
THE POSESSOR AGREES TO THE FOLLOWING:
I TO MAINTAIN THIS DOCUMENT IN CONFIDENCE
II NOT TO REPRODUCE OR COPY IT
III NOT TO REVEAL OR PUBLISH IT IN WHOLE OR PART
IV ALL RIGHTS RESERVED

Primary / Merged (CPU/PCH) Micro2-XDP

NOTE: This is not the standard XDP pinout.
Use with 921-0133 Adapter Flex to
support chipset debug.

Vinafix.com

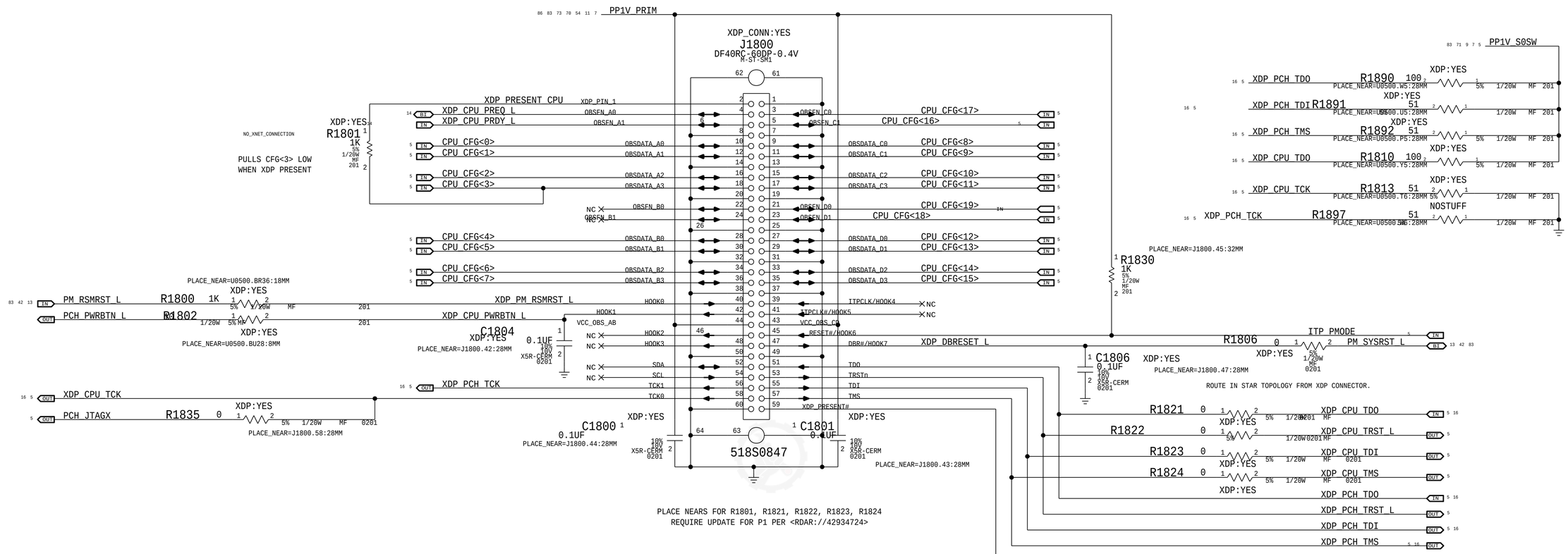

PLACE NEARS FOR R1801, R1821, R1822, R1823, R1824
REQUIRE UPDATE FOR P1 PER <RDAR://42934724>

PCH XDP Signals

These signals do not connect to the Primary (Merged) XDP connector in this architecture.
The PDG puts them on a secondary XDP connector that is only needed in some PCH debugging situation.
They are listed here to show their secondary XDP functions and to provide test points for signals that are not used elsewhere.

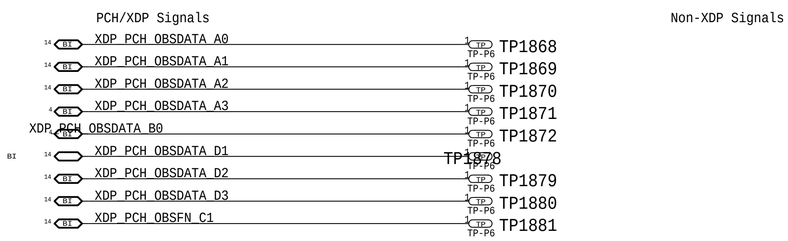

Unused GPIOs have TPs.

BOM_COST_GROUP=DEBUG

PAGE TITLE	CPU/PCH Merged XDP
Apple Inc.	DRAWING NUMBER 051-04273 SIZE D
	REVISION 4.0.0
	BRANCH evt-1
	PAGE 18 OF 500
	SHEET 16 OF 98

NOTICE OF PROPRIETARY PROPERTY:
THE INFORMATION CONTAINED HEREIN IS THE PROPRIETARY PROPERTY OF APPLE INC.
THE POSESSOR AGREES TO THE FOLLOWING:
I TO MAINTAIN THIS DOCUMENT IN CONFIDENCE
II NOT TO REPRODUCE OR COPY IT
III NOT TO REVEAL OR PUBLISH IT IN WHOLE OR PART
IV ALL RIGHTS RESERVED

24MHz CLOCK

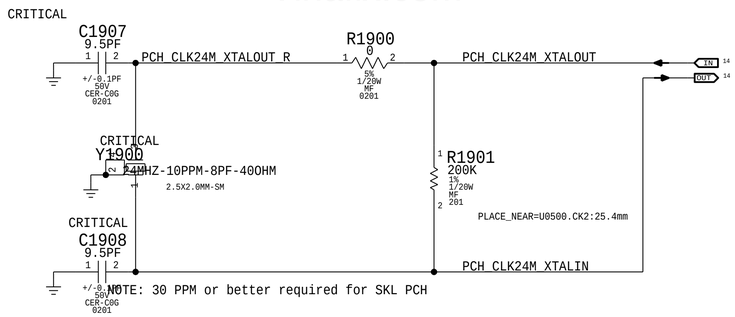

THRMTRIP# ISOLATION & LEVEL-SHIFT TO 1V8

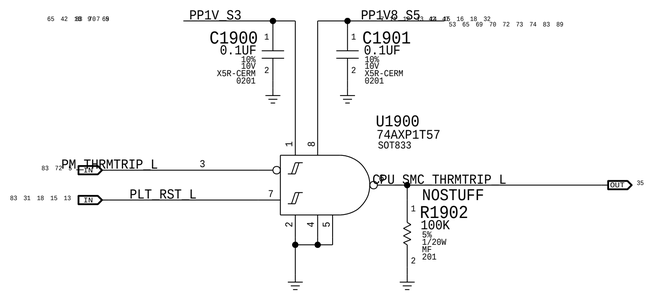

BOM_COST_GROUP=CPU & CHIPSET

PAGE TITLE

Chipset Support 1

Apple Inc.

DRAWING NUMBER 051-04273

SIZE D

REVISION 4.0.0

BRANCH evt-1

PAGE 19 OF 500

SHEET 17 OF 98

NOTICE OF PROPRIETARY PROPERTY:
THE INFORMATION CONTAINED HEREIN IS THE PROPRIETARY PROPERTY OF APPLE INC.
THE POSESSOR AGREES TO THE FOLLOWING:
I TO MAINTAIN THIS DOCUMENT IN CONFIDENCE
II NOT TO REPRODUCE OR COPY IT
III NOT TO REVEAL OR PUBLISH IT IN WHOLE OR PART
IV ALL RIGHTS RESERVED

Vinafix.com

PLATFORM RESET LEVEL-SHIFTER TO 3V3

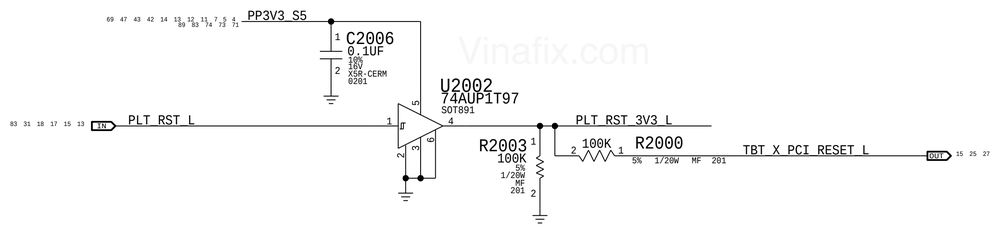

SLP_S0# LEVEL SHIFTER TO 1V8

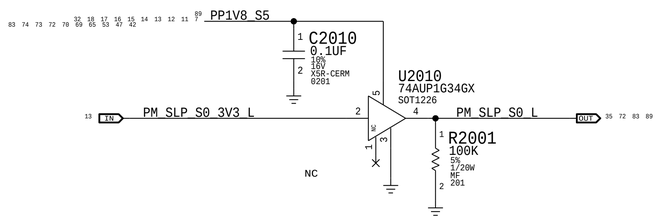

ALL_SYS_PWRGD QUALIFIER & VCCST_PWRGD LEVEL SHIFTER TO 1V

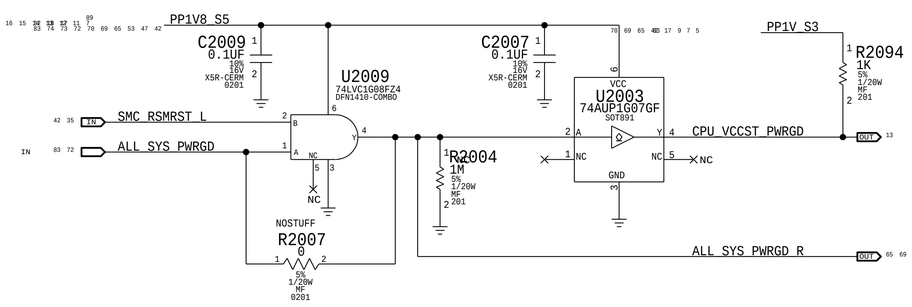

TPs for Chipset Debug Pins

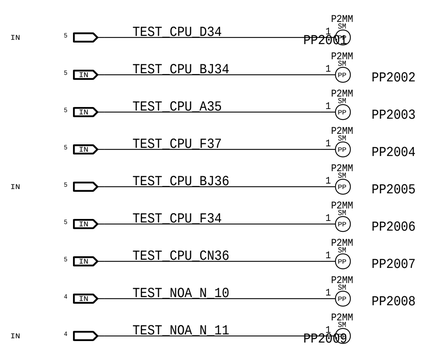

BT AUDIO SYNC BUFFER

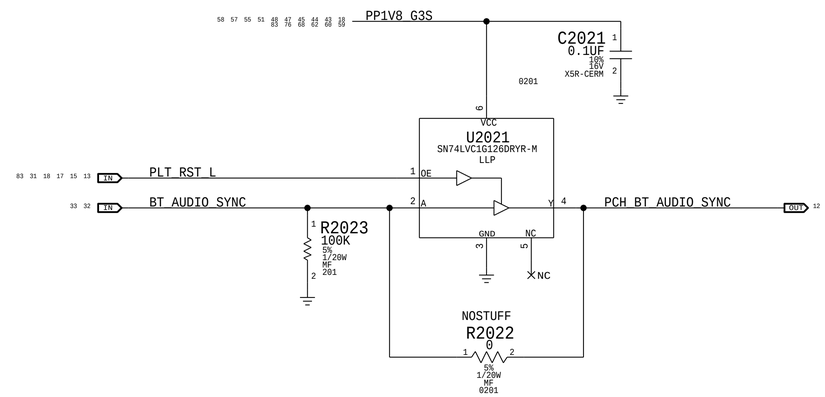

WLAN AUDIO SYNC BUFFER

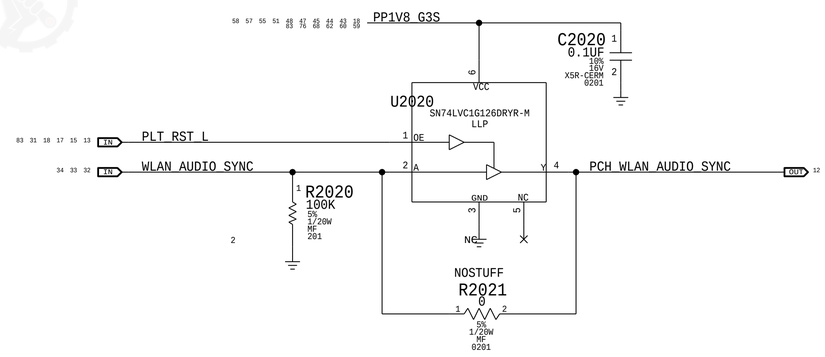

BOM_COST_GROUP=CPU & CHIPSET

PAGE TITLE	CHIPSET SUPPORT 2
Apple Inc.	DRAWING NUMBER 051-04273 / SIZE D
	REVISION 4.0.0
NOTICE OF PROPRIETARY PROPERTY: THE INFORMATION CONTAINED HEREIN IS THE PROPRIETARY PROPERTY OF APPLE INC. THE POSESSOR AGREES TO THE FOLLOWING: I TO MAINTAIN THIS DOCUMENT IN CONFIDENCE II NOT TO REPRODUCE OR COPY IT III NOT TO REVEAL OR PUBLISH IT IN WHOLE OR PART IV ALL RIGHTS RESERVED	BRANCH evt-1
	PAGE 20 OF 500
	SHEET 18 OF 98

Vinafix.com

CPU-Based Margining

VRef Dividers

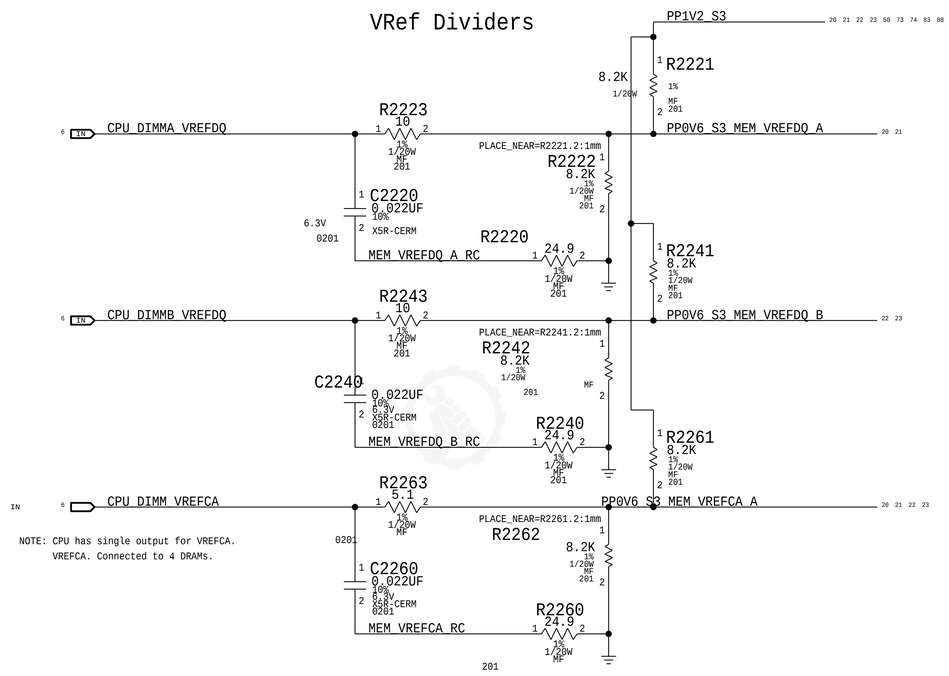

NOTE: CPU has single output for VREFCA.
VREFCA. Connected to 4 DRAMs.

BOM_COST_GROUP=CPU & CHIPSET

SYNC_MASTER=J213_JOHN SYNC_DATE=06/05/2018

PAGE TITLE
LPDDR3 VREF MARGINING

Apple Inc.

DRAWING NUMBER 051-04273 SIZE D
REVISION 4.0.0
BRANCH evt-1
PAGE 22 OF 500
SHEET 19 OF 98

NOTICE OF PROPRIETARY PROPERTY:
THE INFORMATION CONTAINED HEREIN IS THE PROPRIETARY PROPERTY OF APPLE INC.
THE POSESSOR AGREES TO THE FOLLOWING:
I TO MAINTAIN THIS DOCUMENT IN CONFIDENCE
II NOT TO REPRODUCE OR COPY IT
III NOT TO REVEAL OR PUBLISH IT IN WHOLE OR PART
IV ALL RIGHTS RESERVED AG605

Vinafix.com

LPDDR3 CHANNEL A (0-31)

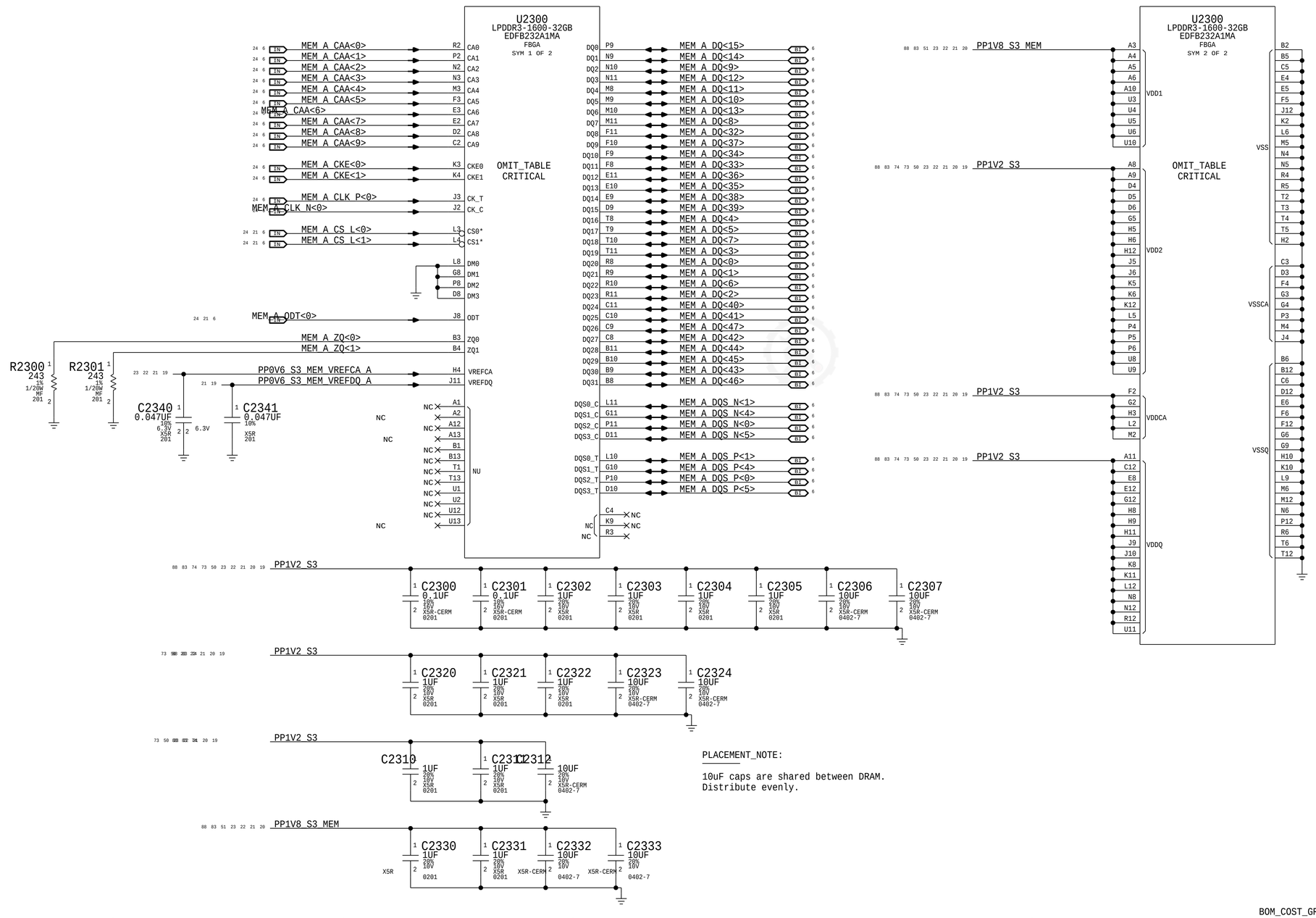

PLACEMENT_NOTE:

10uF caps are shared between DRAM.
Distribute evenly.

BOM_COST_GROUP=DRAM

SYNC_MASTER=J213_KEI SYNC_DATE=09/10/2018

PAGE TITLE
LPDDR3 DRAM Channel A (00-31)

Apple Inc.

DRAWING NUMBER	051-04273
SIZE	D
REVISION	4.0.0
BRANCH	evt-1
PAGE	23 OF 500
SHEET	20 OF 98

NOTICE OF PROPRIETARY PROPERTY:
THE INFORMATION CONTAINED HEREIN IS THE PROPRIETARY PROPERTY OF APPLE INC.
THE POSESSOR AGREES TO THE FOLLOWING:
I TO MAINTAIN THIS DOCUMENT IN CONFIDENCE
II NOT TO REPRODUCE OR COPY IT
III NOT TO REVEAL OR PUBLISH IT IN WHOLE OR PART
IV ALL RIGHTS RESERVED

Vinafix.com

LPDDR3 CHANNEL A (32-63)

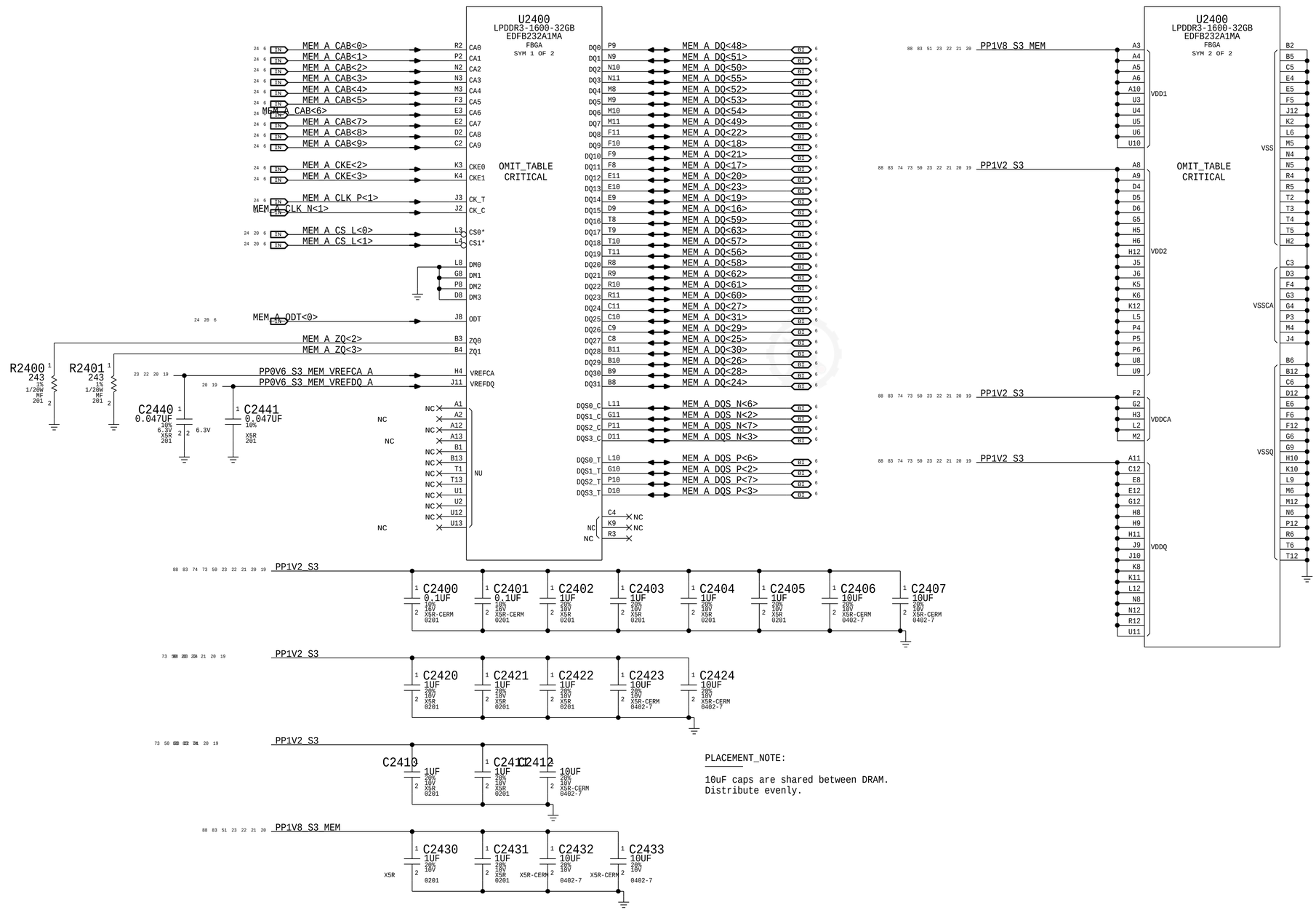

PLACEMENT_NOTE:

10uF caps are shared between DRAM.
Distribute evenly.

BOM_COST_GROUP=DRAM

SYNC_MASTER=J213_KEI SYNC_DATE=09/10/2018

PAGE TITLE
LPDDR3 DRAM Channel A (32-63)

Apple Inc.

DRAWING NUMBER	051-04273
SIZE	D
REVISION	4.0.0
BRANCH	evt-1
PAGE	24 OF 500
SHEET	21 OF 98

NOTICE OF PROPRIETARY PROPERTY:
THE INFORMATION CONTAINED HEREIN IS THE PROPRIETARY PROPERTY OF APPLE INC.
THE POSESSOR AGREES TO THE FOLLOWING:
I TO MAINTAIN THIS DOCUMENT IN CONFIDENCE
II NOT TO REPRODUCE OR COPY IT
III NOT TO REVEAL OR PUBLISH IT IN WHOLE OR PART
IV ALL RIGHTS RESERVED

Vinafix.com

LPDDR3 CHANNEL B (0-31)

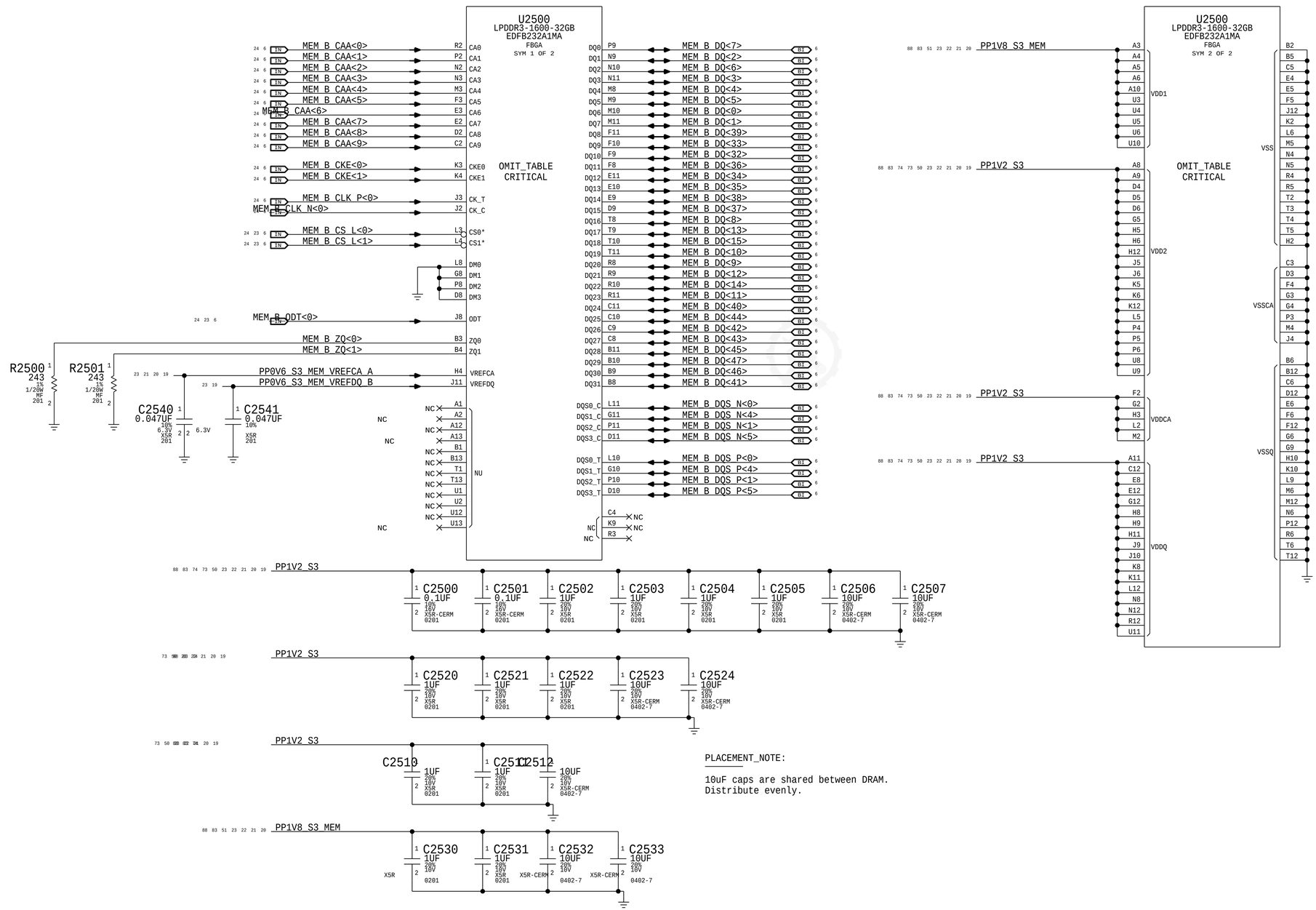

PLACEMENT_NOTE:

10uF caps are shared between DRAM.
Distribute evenly.

BOM_COST_GROUP=DRAM

SYNC_MASTER=J213_KEI SYNC_DATE=09/10/2018

PAGE TITLE
LPDDR3 DRAM Channel B (00-31)

Apple Inc.

DRAWING NUMBER	051-04273
SIZE	D
REVISION	4.0.0
BRANCH	evt-1
PAGE	25 OF 500
SHEET	22 OF 98

NOTICE OF PROPRIETARY PROPERTY:
THE INFORMATION CONTAINED HEREIN IS THE PROPRIETARY PROPERTY OF APPLE INC.
THE POSESSOR AGREES TO THE FOLLOWING:
I TO MAINTAIN THIS DOCUMENT IN CONFIDENCE
II NOT TO REPRODUCE OR COPY IT
III NOT TO REVEAL OR PUBLISH IT IN WHOLE OR PART
IV ALL RIGHTS RESERVED

Vinafix.com

LPDDR3 CHANNEL B (32-63)

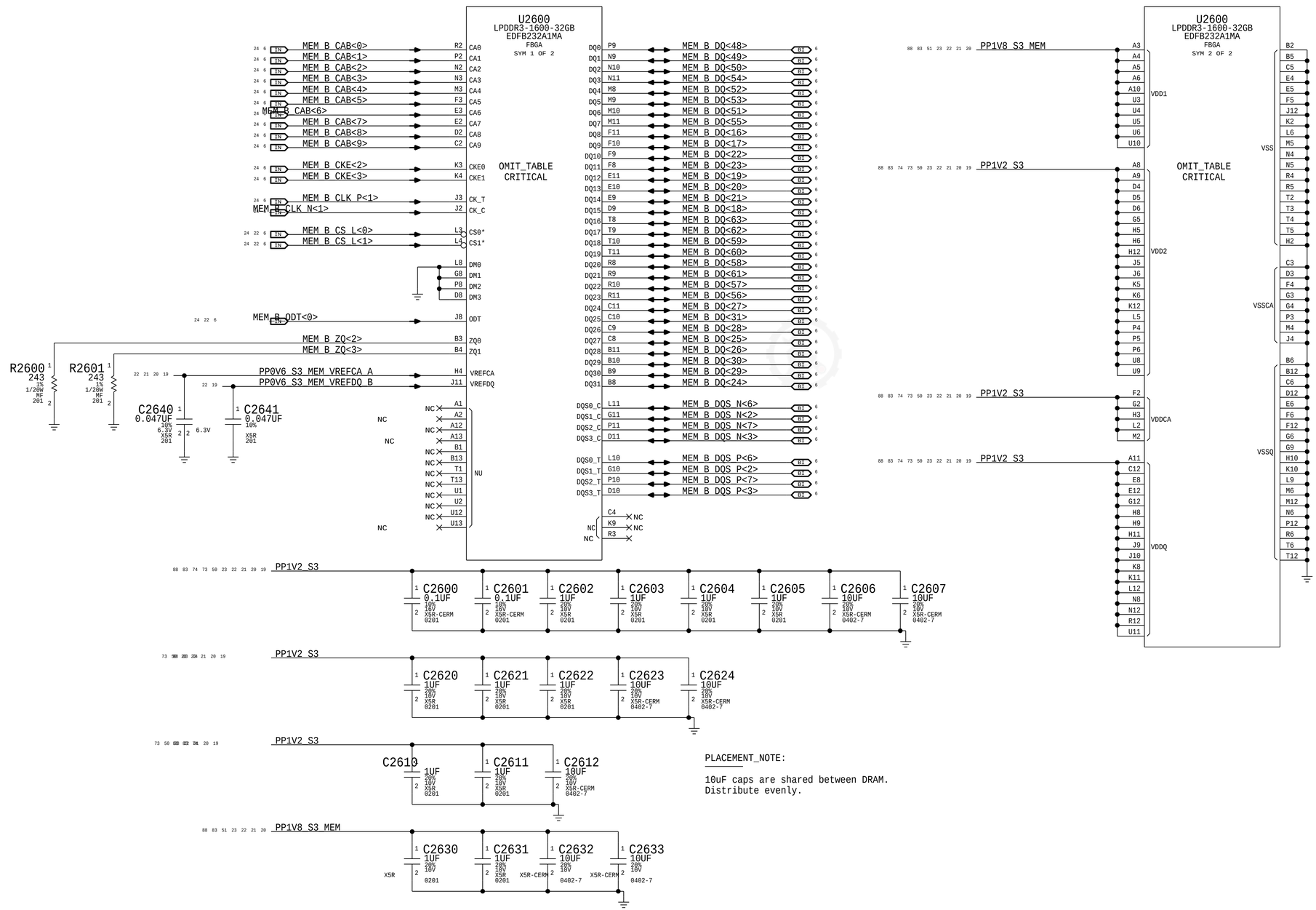

PLACEMENT_NOTE:

10uF caps are shared between DRAM.
Distribute evenly.

BOM_COST_GROUP=DRAM

SYNC_MASTER=J213_KEI SYNC_DATE=09/10/2018

PAGE TITLE
LPDDR3 DRAM Channel B (32-63)

Apple Inc.

DRAWING NUMBER 051-04273
SIZE D
REVISION 4.0.0
BRANCH evt-1
PAGE 26 OF 500
SHEET 23 OF 98

NOTICE OF PROPRIETARY PROPERTY:
THE INFORMATION CONTAINED HEREIN IS THE PROPRIETARY PROPERTY OF APPLE INC.
THE POSESSOR AGREES TO THE FOLLOWING:
I TO MAINTAIN THIS DOCUMENT IN CONFIDENCE
II NOT TO REPRODUCE OR COPY IT
III NOT TO REVEAL OR PUBLISH IT IN WHOLE OR PART
IV ALL RIGHTS RESERVED

Intel recommends 68 Ohm for CMD/ADDR, 80 Ohm for CTRL/CKE, 38 Ohm for CLK

PP0V6_S0_DDRVTT

MEM_A_CAA<9>	R2700	68	
MEM_A_CAA<8>	R2701	68	
MEM_A_CAA<6>	R2702		
MEM_A_CAA<7>	R2703		
MEM_A_CAA<5>	R2704		
MEM_A_CLK_P<0>	R2705	39	
MEM_A_CLK_N<0>	R2706	39	
MEM_A_CKE<1>	R2707	82	
MEM_A_CKE<0>	R2708	82	
MEM_A_CAA<4>	R2709	68	
MEM_A_CAA<3>	R2710	68	
MEM_A_CAA<2>	R2711	68	
MEM_A_CAA<1>	R2712		
MEM_A_CAA<0>	R2713		
MEM_A_CAB<9>	R2714		
MEM_A_CAB<8>	R2715	68	
MEM_A_CAB<6>	R2716	68	
MEM_A_CAB<7>	R2717	68	
MEM_A_CAB<5>	R2718	68	
MEM_A_CLK_P<1>	R2719	39	
MEM_A_CLK_N<1>	R2720	39	
MEM_A_CKE<2>	R2721	82	
MEM_A_CKE<3>	R2722	82	
MEM_A_CAB<4>	R2723	68	
MEM_A_CAB<2>	R2724		
MEM_A_CAB<3>	R2725	68	
MEM_A_CAB<1>	R2726	68	
MEM_A_CAB<0>	R2727	68	
MEM_A_CS_L<0>	R2728	82	
MEM_A_CS_L<1>	R2729	82	
MEM_A_ODT<0>	R2730	82	

C2700 0.47UF 20% 4V CERM-X5R-1 201
C2701 0.47UF 20% 4V CERM-X5R-1 201
C2702 0.47UF 20% 4V CERM-X5R-1 201
C2703 0.47UF 20% 4V CERM-X5R-1 201
C2704 0.47UF 20% 4V CERM-X5R-1 201
C2705 0.47UF 20% 4V CERM-X5R-1 201
C2706 0.47UF 20% 4V CERM-X5R-1 201
C2707 0.47UF 20% 4V CERM-X5R-1 201
C2708 0.47UF 20% 4V CERM-X5R-1 201
C2709 0.47UF 20% 4V CERM-X5R-1 201
CRITICAL
C2720 20UF 20% 6.3V CERM-X5R 0402

PP0V6_S0_DDRVTT

MEM_B_CAA<9>	R2740	68	
MEM_B_CAA<8>	R2741	68	
MEM_B_CAA<7>	R2742	68	
MEM_B_CAA<6>	R2743	68	
MEM_B_CAA<5>	R2744	68	
MEM_B_CLK_P<0>	R2745	39	
MEM_B_CLK_N<0>	R2746	39	
MEM_B_CKE<1>	R2747	82	
MEM_B_CKE<0>	R2748	82	
MEM_B_CAA<4>	R2749	68	
MEM_B_CAA<2>	R2750	68	
MEM_B_CAA<3>	R2751	68	
MEM_B_CAA<1>	R2752	68	
MEM_B_CAA<0>	R2753	68	
MEM_B_CAB<9>	R2754	68	
MEM_B_CAB<8>	R2755	68	
MEM_B_CAB<7>	R2756	68	
MEM_B_CAB<6>	R2757	68	
MEM_B_CAB<5>	R2758	68	
MEM_B_CLK_N<1>	R2759	39	
MEM_B_CLK_P<1>	R2760	39	
MEM_B_CKE<2>	R2761	82	
MEM_B_CKE<3>	R2762	82	
MEM_B_CAB<4>	R2763	68	
MEM_B_CAB<2>	R2764	68	
MEM_B_CAB<3>	R2765	68	
MEM_B_CAB<1>	R2766	68	
MEM_B_CAB<0>	R2767	68	
MEM_B_CS_L<0>	R2768	82	
MEM_B_CS_L<1>	R2769	82	
MEM_B_ODT<0>	R2770	82	

C2710 0.47UF 20% 4V CERM-X5R-1 201
C2711 0.47UF 20% 4V CERM-X5R-1 201
C2712 0.47UF 20% 4V CERM-X5R-1 201
C2713 0.47UF 20% 4V CERM-X5R-1 201
C2714 0.47UF 20% 4V CERM-X5R-1 201
C2715 0.47UF 20% 4V CERM-X5R-1 201
C2716 0.47UF 20% 4V CERM-X5R-1 201
C2717 0.47UF 20% 4V CERM-X5R-1 201
C2718 0.47UF 20% 4V CERM-X5R-1 201
C2719 0.47UF 20% 4V CERM-X5R-1 201
CRITICAL
C2740 20UF 20% 6.3V CERM-X5R 0402

BOM_COST_GROUP=DRAM

SYNC_MASTER=J213_JOHN SYNC_DATE=06/05/2018

PAGE TITLE
LPDDR3 DRAM Termination

Apple Inc.

DRAWING NUMBER 051-04273 SIZE D
REVISION 4.0.0
BRANCH evt-1
PAGE 27 OF 500
SHEET 24 OF 98

NOTICE OF PROPRIETARY PROPERTY:
THE INFORMATION CONTAINED HEREIN IS THE PROPRIETARY PROPERTY OF APPLE INC.
THE POSESSOR AGREES TO THE FOLLOWING:
I TO MAINTAIN THIS DOCUMENT IN CONFIDENCE
II NOT TO REPRODUCE OR COPY IT
III NOT TO REVEAL OR PUBLISH IT IN WHOLE OR PART
IV ALL RIGHTS RESERVED

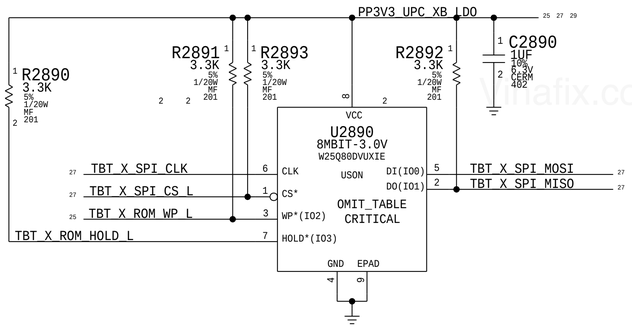

SNK0 AC Coupling

DP_X_SNK0_ML_C_P<0>	C2820	0.22UF	20% 6.3V X5R 0201	DP_X_SNK0_ML_P<0>
DP_X_SNK0_ML_C_N<0>	C2821	0.22UF	20% 6.3V X5R 0201	DP_X_SNK0_ML_N<0>
DP_X_SNK0_ML_C_P<1>	C2822	0.22UF	20% 6.3V X5R 0201	DP_X_SNK0_ML_P<1>
DP_X_SNK0_ML_C_N<1>	C2823	0.22UF	20% 6.3V X5R 0201	DP_X_SNK0_ML_N<1>
DP_X_SNK0_ML_C_P<2>	C2824	0.22UF	20% 6.3V X5R 0201	DP_X_SNK0_ML_P<2>
DP_X_SNK0_ML_C_N<2>	C2825	0.22UF	20% 6.3V X5R 0201	DP_X_SNK0_ML_N<2>
DP_X_SNK0_ML_C_P<3>	C2826	0.22UF	20% 6.3V X5R 0201	DP_X_SNK0_ML_P<3>
DP_X_SNK0_ML_C_N<3>	C2827	0.22UF	20% 6.3V X5R 0201	DP_X_SNK0_ML_N<3>
DP_X_SNK0_AUXCH_C_P	C2828	0.22UF	20% 6.3V X5R 0201	DP_X_SNK0_AUXCH_P
DP_X_SNK0_AUXCH_C_N	C2829	0.22UF	20% 6.3V X5R 0201	DP_X_SNK0_AUXCH_N

SNK1 AC Coupling

DP_X_SNK1_ML_C_P<0>	C2830	0.22UF	20% 6.3V X5R 0201	DP_X_SNK1_ML_P<0>
DP_X_SNK1_ML_C_N<0>	C2831	0.22UF	20% 6.3V X5R 0201	DP_X_SNK1_ML_N<0>
DP_X_SNK1_ML_C_P<1>	C2832	0.22UF	20% 6.3V X5R 0201	DP_X_SNK1_ML_P<1>
DP_X_SNK1_ML_C_N<1>	C2833	0.22UF	20% 6.3V X5R 0201	DP_X_SNK1_ML_N<1>
DP_X_SNK1_ML_C_P<2>	C2834	0.22UF	20% 6.3V X5R 0201	DP_X_SNK1_ML_P<2>
DP_X_SNK1_ML_C_N<2>	C2835	0.22UF	20% 6.3V X5R 0201	DP_X_SNK1_ML_N<2>
DP_X_SNK1_ML_C_P<3>	C2836	0.22UF	20% 6.3V X5R 0201	DP_X_SNK1_ML_P<3>
DP_X_SNK1_ML_C_N<3>	C2837	0.22UF	20% 6.3V X5R 0201	DP_X_SNK1_ML_N<3>
DP_X_SNK1_AUXCH_C_P	C2838	0.22UF	20% 6.3V X5R 0201	DP_X_SNK1_AUXCH_P
DP_X_SNK1_AUXCH_C_N	C2839	0.22UF	20% 6.3V X5R 0201	DP_X_SNK1_AUXCH_N

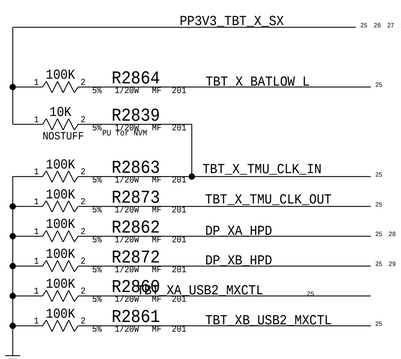

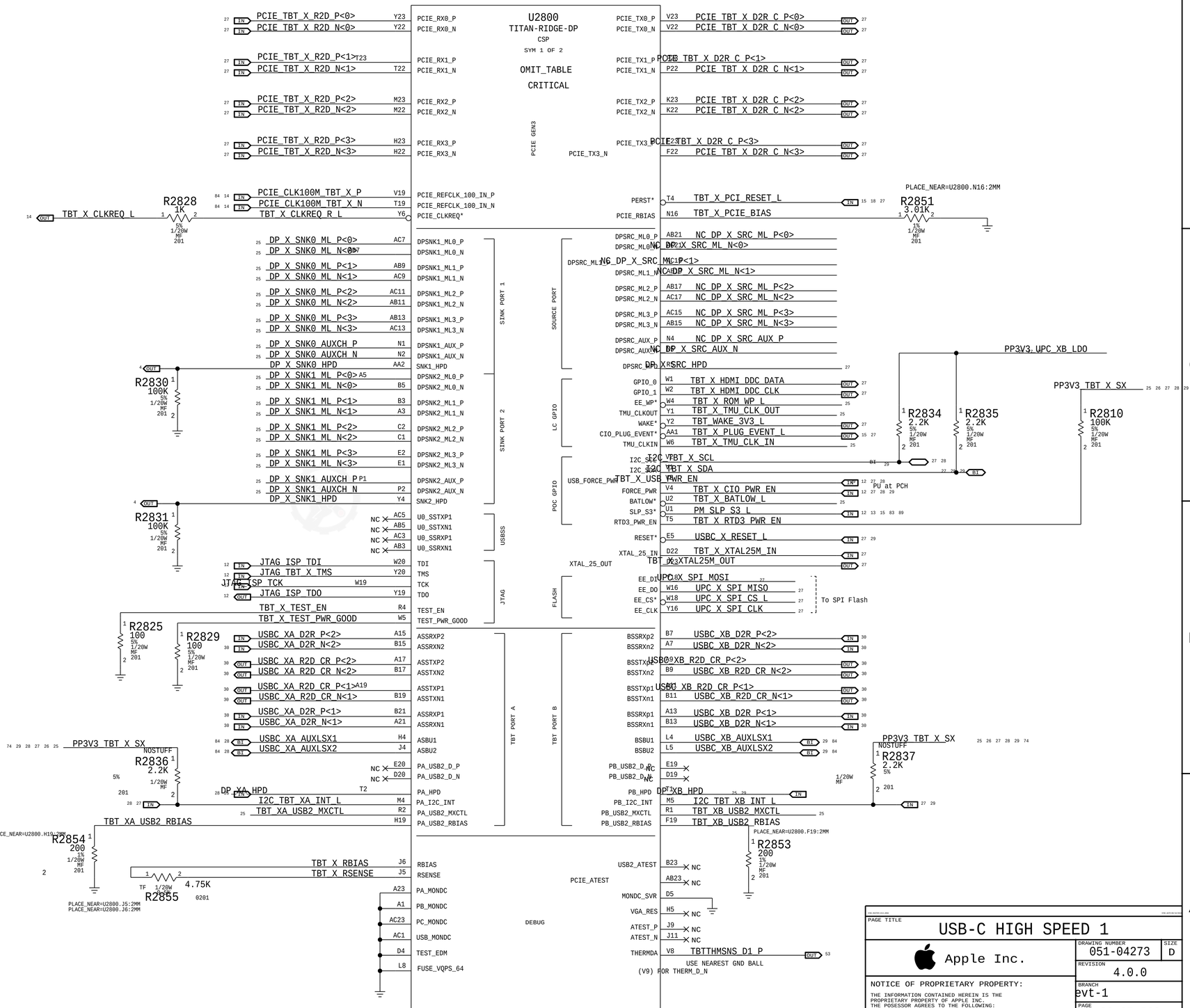

PAGE TITLE

USB-C HIGH SPEED 1

Apple Inc.

DRAWING NUMBER	051-04273
SIZE	D
REVISION	4.0.0
BRANCH	evt-1
PAGE	28 OF 500
SHEET	25 OF 98

NOTICE OF PROPRIETARY PROPERTY:
THE INFORMATION CONTAINED HEREIN IS THE PROPRIETARY PROPERTY OF APPLE INC.
THE POSESSOR AGREES TO THE FOLLOWING:
I TO MAINTAIN THIS DOCUMENT IN CONFIDENCE
II NOT TO REPRODUCE OR COPY IT
III NOT TO REVEAL OR PUBLISH IT IN WHOLE OR PART
IV ALL RIGHTS RESERVED

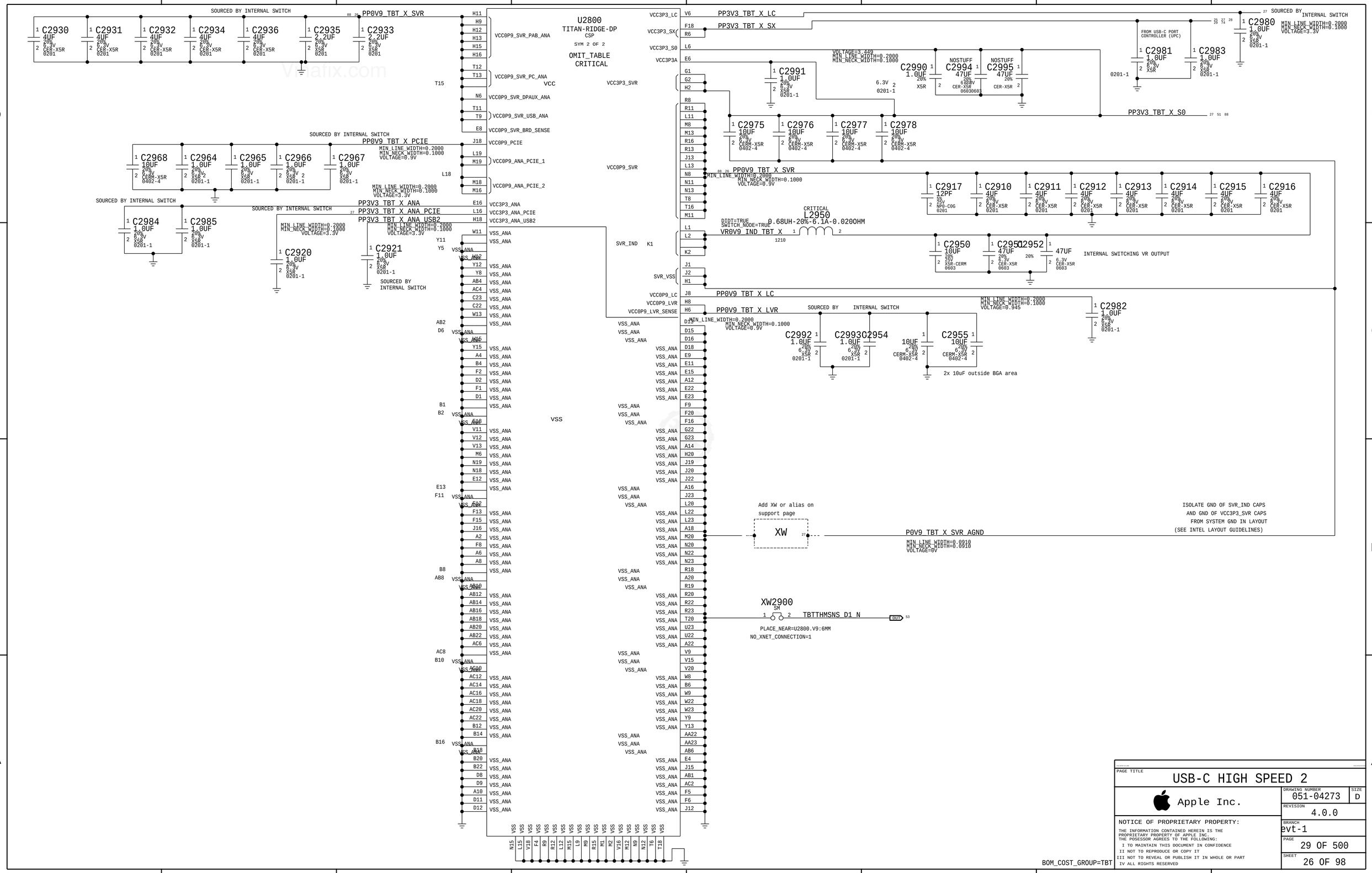

PAGE TITLE: USB-C HIGH SPEED 2

Apple Inc.

DRAWING NUMBER: 051-04273 SIZE: D

REVISION: 4.0.0

BRANCH: evt-1

PAGE: 29 OF 500

SHEET: 26 OF 98

NOTICE OF PROPRIETARY PROPERTY:
THE INFORMATION CONTAINED HEREIN IS THE PROPRIETARY PROPERTY OF APPLE INC.
THE POSESSOR AGREES TO THE FOLLOWING:
I TO MAINTAIN THIS DOCUMENT IN CONFIDENCE
II NOT TO REPRODUCE OR COPY IT
III NOT TO REVEAL OR PUBLISH IT IN WHOLE OR PART
IV ALL RIGHTS RESERVED

USB VBUS Detect

PP1V8_AWAKE → R3081 0 (5% MF 1/20W 0201) → PP20V_USBC_XA_VBUS (<rdar://25149752>)

R3080 30K (NOSTUFF, 5% 1/20W MF 201) → SOC_USB_VBUS

D3001 BZT52C3V0LP-COMBO (DFN1006, NOSTUFF)

Ridge 0.9V SVR XW

XW3001 (SHORT-L6-SM, NO_XNET_CONNECTION=1): P0V9_TBT_X_SVR_AGND

DP SRC OPTIONS

DP_X_SRC_HPD → R3040 100K (5% 1/20W MF 201)

TR XTAL

TBT_X_XTAL25M_OUT → C3002 20PF (5% 25V C0G 0201)

CRITICAL Y3000 25MHZ-25PPM-20PF-50OHM (2.00X1.60-SM)

TBT_X_XTAL25M_IN → C3003 20PF (5% 25V C0G 0201)

Q3001

PP1V8_SLPS2R → R3065 100K (201 MF 1/20W 5%) → PP3V3_G3H_RTC

TBT_WAKE_L (SMC HAS IPU) → Q3001 DMN2250UFB (DFN1006-3) → TBT_WAKE_3V3_L

RIDGE TBT X ARKANOID CONN

USBC_ARKANOID J3001 505070-1222 (M-ST-SM)

TBT_X_PLUG_EVENT_L	1	2	TBT_X_PCI_RESET_L
TBT_WAKE_3V3_L	3	4	USBC_X_RESET_L
TBT_X_CIO_PWR_EN	5	6	PP3V3_TBT_X_SX
TBT_X_USB_PWR_EN	7	8	PP3V3_TBT_X_LC
TBT_POC_RESET	9	10	PP3V3_TBT_X_ANA_PCIE
PP3V3_TBT_X_S0	11	12	TBT_X_HDMI_DDC_DATA
	13	14	
	15	16	

ACE2 ARKANOID DEBUG CONN

USBC_ARKANOID J3000 505070-1222 (M-ST-SM)

I2C_TBT_XB_INT_L	1	2	I2C_TBT_XA_INT_L
I2C_UPC_X_SCL2	3	4	I2C_TBT_X_SDA
I2C_UPC_X_SDA2	5	6	I2C_TBT_X_SCL
UPC_I2C_INT_L	7	8	UPC_XA_SER_DBG
TBT_X_SPI_ARK_CLK	9	10	UPC_XB_SER_DBG
UPC_XA_UART_TX	11	12	UPC_XA_UART_RX
	13	14	
	15	16	

DEBUG PATHS

PCH USB3 (DCI) → XB UPC DBG [3:0]

USB3_BSSB_D2R_P	R3012 0 (5% 1/20W MF 0201)	USB3_BSSB_D2R_R_P	
USB3_BSSB_D2R_N	R3013 0 (5% 1/20W MF 0201)	USB3_BSSB_D2R_R_N	
USB3_BSSB_R2D_C_P	C3010 0.1UF (10% 16V X5R-CERM 0201)	USB3_BSSB_R2D_P	
USB3_BSSB_R2D_C_N	C3011 0.1UF (10% 16V X5R-CERM 0201)	USB3_BSSB_R2D_N	

H9M → XB UPC DBG [5:4]

SWD_SOC_DEBUG_SWCLK	R3014 0 (PLACE_NEAR=U3100.B3:5MM, 5% 1/20W MF 0201)	SWD_SOC_SWCLK_XB
SWD_SOC_DEBUG_SWDIO	R3015 0 (PLACE_NEAR=U3100.F15:5MM, 5% 1/20W MF 0201)	SWD_SOC_SWDIO_XB

PCH UART 2 → XA UPC DBG [7:6]

PCH_UART_DEBUG_R2D	R3016 0 (PLACE_NEAR=U3100.D15:5MM, 5% 1/20W MF 0201)	PCH_UART_DEBUG_R_R2D
PCH_UART_DEBUG_D2R	R3017 0 (5% 1/20W MF 0201, PLACE_NEAR=U3100.D19:5MM)	PCH_UART_DEBUG_R_D2R

ACE2 PULL DOWNS

R3039	100K (5% 1/20W MF 201)	PD_UPC_XA_GPIO4
R3038	100K (5% 1/20W MF 201)	PD_UPC_XB_GPIO1
R3037	100K (5% 1/20W MF 201)	PD_UPC_XB_GPIO4
R3036	100K (5% 1/20W MF 201)	PD_UPC_XB_GPIO9
R3035	100K (5% 1/20W MF 201)	PD_UPC_XB_GPIO10
R3034	100K (5% 1/20W MF 201)	PD_UPC_X_5V_EN
R3033	100K (5% 1/20W MF 201)	SPARE_UPC_XA_USB3_RN
R3032	100K (5% 1/20W MF 201)	SPARE_UPC_XA_USB3_RP
R3031	100K (5% 1/20W MF 201)	SPARE_UPC_XB_USB3_RN
R3030	100K (5% 1/20W MF 201)	SPARE_UPC_XB_USB3_RP
R3029	100K (5% 1/20W MF 201)	SPARE_UPC_XB_USB2_RN
R3028	100K (5% 1/20W MF 201)	SPARE_UPC_XB_USB2_RP
R3027	100K (5% 1/20W MF 201)	SPARE_UPC_XA_DBG0_R
R3026	100K (5% 1/20W MF 201)	SPARE_UPC_XA_DBG1_R
R3025	100K (5% 1/20W MF 201)	SPARE_UPC_XA_DBG2_R
R3024	100K (5% 1/20W MF 201)	SPARE_UPC_XA_DBG3_R
R3023	0 (NOSTUFF, 5% 1/20W MF 0201)	UPC_XA_VDDIO_CFG
R3022	0 (NOSTUFF, 5% 1/20W MF 0201)	UPC_XB_VDDIO_CFG
R3021	0 (5% 1/20W MF 0201)	UPC_XA_RESET
R3020	0 (5% 1/20W MF 0201)	UPC_XB_RESET

AARDVARKANOID CONN

USBC_AARDVARKANOID J3002 505070-1222 (M-ST-SM)

PP3V3_UPC_XB_LDO	1	2	TBT_X_SPI_DBG_CS_L
UPC_XB_SWD_DATA	3	4	TBT_X_SPI_DBG_CLK
UPC_XB_SWD_CLK	5	6	TBT_X_SPI_DBG_MOSI
TBT_X_SPI_DBG_MISO	7	8	UPC_XA_SWD_CLK
I2C_TBT_X_SDA	9	10	UPC_XA_SWD_DATA
I2C_TBT_X_SCL	11	12	PP3V3_UPC_XA_LDO
	13	14	
	15	16	

RIDGE PULL UP/DOWN

PP3V3_TBT_X_S0

R3043	100K (5% 1/20W MF 201)	TBT_X_HDMI_DDC_CLK
R3044	100K (5% 1/20W MF 201)	TBT_X_HDMI_DDC_DATA

X ACE-SMC I2C SERIES R'S

I2C_UPC_SDA (PLACE_NEAR=U3200.B7:7MM)	R3045 0 (5% 1/20W MF 0201, CKPLUS_WAIVE=I2C_PULLUP)	I2C_UPC_X_SDA2
I2C_UPC_SCL (PLACE_NEAR=U3200.A6:7MM)	R3046 0 (5% 1/20W MF 0201, CKPLUS_WAIVE=I2C_PULLUP)	I2C_UPC_X_SCL2

FOR LAYOUT PURPOSES: DIRECTLY CONNECT TO XB
THEN BRANCH OFF TO XA AND ARKANOID CONNECTOR

USB2 OC

UPC_XA_FAULT_L	R3047 0 (5% 1/20W MF 0201)	UPC_XA_FAULT_L_R
UPC_XB_FAULT_L	R3048 0 (5% 1/20W MF 0201)	UPC_XB_FAULT_L_R

FUSES FOR UPC

PPDCIN_G3H → F3000 6A-32V (CRITICAL, PLACE_NEAR=U3100:5MM) → PPDCIN_XA_G3H_F; C3020 0.1UF (10% 35V CER-X5R 0201)

PPDCIN_G3H → F3001 6A-32V 740S00053 (CRITICAL, PLACE_NEAR=U3200:5MM) → PPDCIN_XB_G3H_F; C3021 0.1UF (10% 35V CER-X5R 0201)

ARKANOID

USBC_ARKANOID

R3094	100 (5% 1/20W MF 201)	TBT_X_SPI_ARK_CLK

AARDVARKANOID

USBC_AARDVARKANOID

R3086	15 (5% 1/20W MF 201)	TBT_X_SPI_DBG_CLK
R3087	15 (5% 1/20W MF 201)	TBT_X_SPI_DBG_CS_L
R3088	15 (5% 1/20W MF 201)	TBT_X_SPI_DBG_MOSI
R3089	15 (5% 1/20W MF 201)	TBT_X_SPI_DBG_MISO

ROM / XB ACE

TBT_X_SPI_CLK	R3095 15 (5% 1/20W MF 201)	UPC_XB_SPI_CLK
TBT_X_SPI_CS_L	R3096 15 (5% 1/20W MF 201)	UPC_XB_SPI_CS_L
TBT_X_SPI_MOSI	R3097 15 (5% 1/20W MF 201)	UPC_XB_SPI_MOSI
TBT_X_SPI_MISO	R3098 15 (5% 1/20W MF 201)	UPC_XB_SPI_MISO

TR

	R3090 15 (5% 1/20W MF 201)	UPC_X_SPI_CLK
	R3091 15 (5% 1/20W MF 201)	UPC_X_SPI_CS_L
	R3092 15 (5% 1/20W MF 201)	UPC_X_SPI_MOSI
	R3093 15 (5% 1/20W MF 201)	UPC_X_SPI_MISO

Ridge PCIE Caps

D2R

PCIE_TBT_X_D2R_C_P<0>	C3050 0.22UF (0201 X5R 6.3V 20%)	PCIE_TBT_X_D2R_P<0>
PCIE_TBT_X_D2R_C_N<0>	C3051 0.22UF (0201 X5R 6.3V 20%)	PCIE_TBT_X_D2R_N<0>
PCIE_TBT_X_D2R_C_P<1>	C3052 0.22UF (0201 X5R 6.3V 20%)	PCIE_TBT_X_D2R_P<1>
PCIE_TBT_X_D2R_C_N<1>	C3053 0.22UF (0201 X5R 6.3V 20%)	PCIE_TBT_X_D2R_N<1>
PCIE_TBT_X_D2R_C_P<2>	C3054 0.22UF (0201 X5R 6.3V 20%)	PCIE_TBT_X_D2R_P<2>
PCIE_TBT_X_D2R_C_N<2>	C3055 0.22UF (0201 X5R 6.3V 20%)	PCIE_TBT_X_D2R_N<2>
PCIE_TBT_X_D2R_C_P<3>	C3056 0.22UF (0201 X5R 6.3V 20%)	PCIE_TBT_X_D2R_P<3>
PCIE_TBT_X_D2R_C_N<3>	C3057 0.22UF (0201 X5R 6.3V 20%)	PCIE_TBT_X_D2R_N<3>

R2D

PCIE_TBT_X_R2D_C_P<0>	C3040 0.22UF (0201 X5R 6.3V 20%)	PCIE_TBT_X_R2D_P<0>
PCIE_TBT_X_R2D_C_N<0>	C3041 0.22UF (0201 X5R 6.3V 20%)	PCIE_TBT_X_R2D_N<0>
PCIE_TBT_X_R2D_C_P<1>	C3042 0.22UF (0201 X5R 6.3V 20%)	PCIE_TBT_X_R2D_P<1>
PCIE_TBT_X_R2D_C_N<1>	C3043 0.22UF (0201 X5R 6.3V 20%)	PCIE_TBT_X_R2D_N<1>
PCIE_TBT_X_R2D_C_P<2>	C3044 0.22UF (0201 X5R 6.3V 20%)	PCIE_TBT_X_R2D_P<2>
PCIE_TBT_X_R2D_C_N<2>	C3045 0.22UF (0201 X5R 6.3V 20%)	PCIE_TBT_X_R2D_N<2>
PCIE_TBT_X_R2D_C_P<3>	C3046 0.22UF (0201 X5R 6.3V 20%)	PCIE_TBT_X_R2D_P<3>
PCIE_TBT_X_R2D_C_N<3>	C3047 0.22UF (0201 X5R 6.3V 20%)	PCIE_TBT_X_R2D_N<3>

BOM_COST_GROUP=TBT

PAGE TITLE: USB-C SUPPORT

Apple Inc.

DRAWING NUMBER	051-04273
SIZE	D
REVISION	4.0.0
BRANCH	evt-1
PAGE	30 OF 500
SHEET	27 OF 98

NOTICE OF PROPRIETARY PROPERTY:
THE INFORMATION CONTAINED HEREIN IS THE PROPRIETARY PROPERTY OF APPLE INC.
THE POSESSOR AGREES TO THE FOLLOWING:
I TO MAINTAIN THIS DOCUMENT IN CONFIDENCE
II NOT TO REPRODUCE OR COPY IT
III NOT TO REVEAL OR PUBLISH IT IN WHOLE OR PART
IV ALL RIGHTS RESERVED

PRIMARY USB-C PORT CONTROLLER (UPC) [FRONT LEFT]

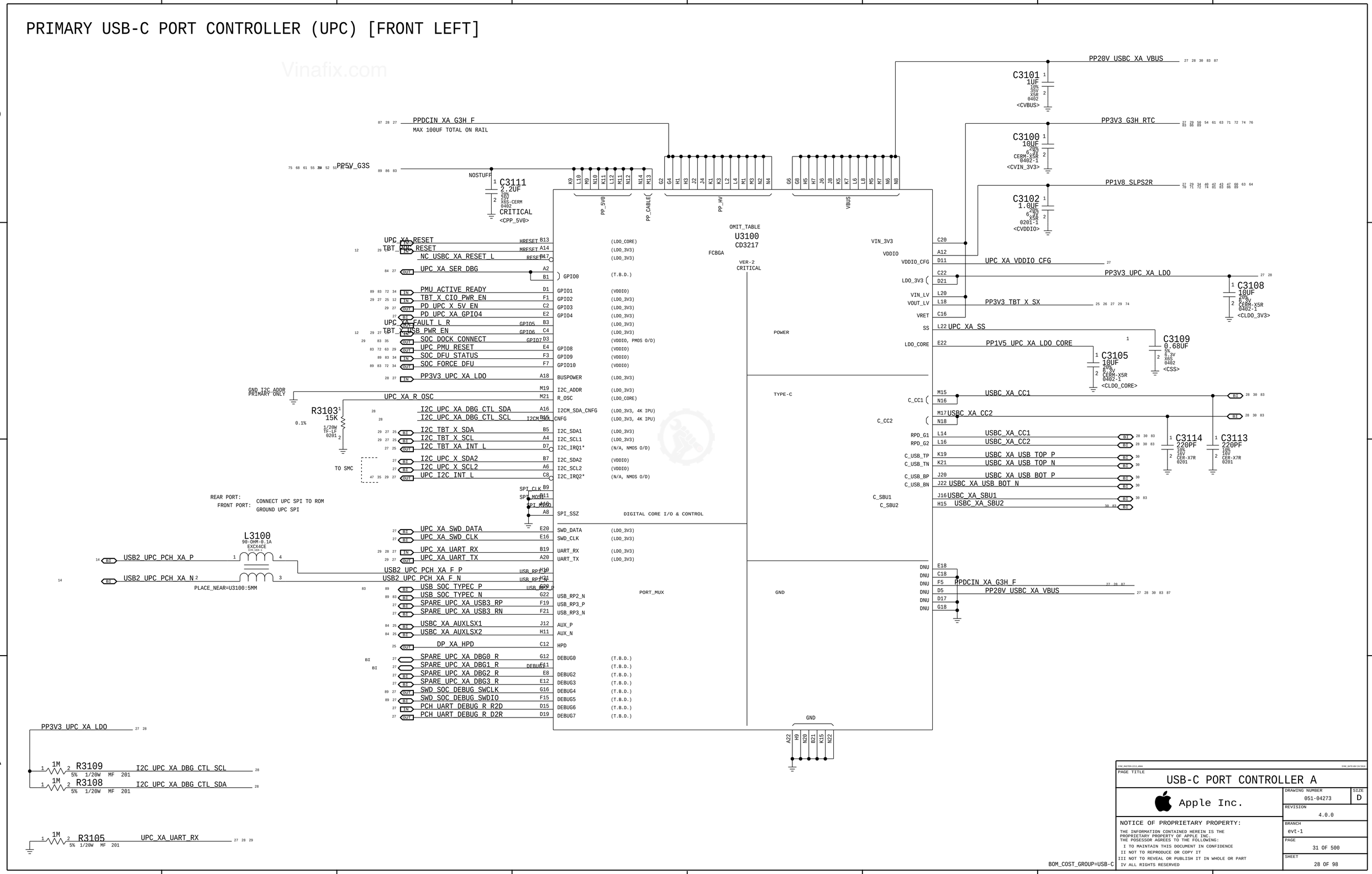

PAGE TITLE
USB-C PORT CONTROLLER A

Apple Inc.

DRAWING NUMBER 051-04273
SIZE D
REVISION 4.0.0
BRANCH evt-1
PAGE 31 OF 500
SHEET 28 OF 98

NOTICE OF PROPRIETARY PROPERTY:
THE INFORMATION CONTAINED HEREIN IS THE PROPRIETARY PROPERTY OF APPLE INC.
THE POSESSOR AGREES TO THE FOLLOWING:
I TO MAINTAIN THIS DOCUMENT IN CONFIDENCE
II NOT TO REPRODUCE OR COPY IT
III NOT TO REVEAL OR PUBLISH IT IN WHOLE OR PART
IV ALL RIGHTS RESERVED

SECONDARY USB-C PORT CONTROLLER (UPC) [REAR LEFT]

Vinafix.com

PPDCIN_XB_G3H_F
MAX 100UF TOTAL ON RAIL

PP5V_G3S

NOSTUFF
C3211 2.2UF 20% 25V X6S-CERM 0402 CRITICAL <CPP_5V0>

PP_5V0 | PP_CABLE | PP_HV | VBUS

OMIT_TABLE
U3200
CD3217
FCBGA
VER-2
CRITICAL

PP20V_USBC_XB_VBUS — C3201 1UF 10% 35V X5R 0402 <CVBUS>
PP3V3_G3H_RTC — C3200 10UF 20% 6.3V CERM-X5R 0402-1 <CVIN_3V3>
PP1V8_SLPS2R — C3202 1.0UF 20% 6.3V X5R 0201-1 <CVDDIO>

Signal	Pin	Dir	Block
UPC_XB_RESET	B13		(LDO_CORE)
TBT_PMU_RESET	A14	IN	(LDO_3V3)
USBC_X_RESET_L	A17	OUT	(LDO_3V3)
UPC_XB_SER_DBG	A2	OUT	GPIO0 (T.B.D.)
	B1		
PD_UPC_XB_GPIO1	D1	BI	GPIO1 (VDDIO)
TBT_X_CIO_PWR_EN	F1	IN	GPIO2 (LDO_3V3)
PD_UPC_X_5V_EN	C2	OUT	GPIO3 (LDO_3V3)
PD_UPC_XB_GPIO4	E2	BI	GPIO4 (LDO_3V3)
UPC_XB_FAULT_L_R	B3	BI	GPIO5 (LDO_3V3)
TBT_USB_PWR_EN	C4	IN	GPIO6 (LDO_3V3)
SOC_DOCK_CONNECT	D3	OUT	GPIO7 (VDDIO, PMOS O/D)
UPC_PMU_RESET	E4	OUT	GPIO8 (VDDIO)
PD_UPC_XB_GPIO9	F3	BI	GPIO9 (VDDIO)
PD_UPC_XB_GPIO10	F7	BI	GPIO10 (VDDIO)
PP3V3_UPC_XB_LDO	A18	IN	BUSPOWER (LDO_3V3)
NC_UPC_XB_I2C_ADDR	M19		I2C_ADDR (LDO_3V3)
UPC_XB_R_OSC	M21		R_OSC (LDO_CORE)
I2C_UPC_XB_DBG_CTL_SDA	A16		I2CM_SDA_CNFG (LDO_3V3, 4K IPU)
I2C_UPC_XB_DBG_CTL_SCL	B15		I2CM_SCL_CNFG (LDO_3V3, 4K IPU)
I2C_TBT_X_SDA	B5	BI	I2C_SDA1 (LDO_3V3)
I2C_TBT_X_SCL	A4	BI	I2C_SCL1 (LDO_3V3)
I2C_TBT_XB_INT_L	D7	OUT	I2C_IRQ1* (N/A, NMOS O/D)
I2C_UPC_SDA	B7	BI	I2C_SDA2 (VDDIO)
I2C_UPC_SCL	A6	BI	I2C_SCL2 (VDDIO)
UPC_I2C_INT_L	C8	OUT	I2C_IRQ2* (N/A, NMOS O/D)
UPC_XB_SPI_CLK	B9	OUT	SPI_CLK
UPC_XB_SPI_MOSI	B11	OUT	SPI_MOSI
UPC_XB_SPI_MISO	A10	IN	SPI_MISO
UPC_XB_SPI_CS_L	A8	OUT	SPI_SSZ DIGITAL CORE I/O & CONTROL
UPC_XB_SWD_DATA	E20	BI	SWD_DATA (VDDIO, IPU)
UPC_XB_SWD_CLK	E16	BI	SWD_CLK (VDDIO, IPU)
UPC_XA_UART_TX	B19	IN	UART_RX (LDO_3V3)
UPC_XA_UART_RX	A20	OUT	UART_TX (LDO_3V3)
USB2_UPC_PCH_XB_F_P	H10		USB_RP1_P
USB2_UPC_PCH_XB_F_N	H11		USB_RP1_N
SPARE_UPC_XB_USB2_RP	G20		USB_RP2_P
SPARE_UPC_XB_USB2_RN	G22		USB_RP2_N
SPARE_UPC_XB_USB3_RP	F19		USB_RP3_P
SPARE_UPC_XB_USB3_RN	F21		USB_RP3_N
USBC_XB_AUXLSX1	J12	BI	AUX_P
USBC_XB_AUXLSX2	H11	BI	AUX_N
DP_XB_HPD	C12	OUT	HPD
USB3_BSSB_D2R_R_P	G12	OUT	DEBUG0 (T.B.D.)
USB3_BSSB_D2R_R_N	E11	OUT	DEBUG1 (T.B.D.)
USB3_BSSB_R2D_P	E8	IN	DEBUG2 (T.B.D.)
USB3_BSSB_R2D_N	E12	IN	DEBUG3 (T.B.D.)
SWD_SOC_SWCLK_XB	G16	OUT	DEBUG4 (T.B.D.)
SWD_SOC_SWDIO_XB	F15	BI	DEBUG5 (T.B.D.)
SMC_DEBUGPRT_R_TX	D15	IN	DEBUG6 (T.B.D.)
SMC_DEBUGPRT_R_RX	D19	OUT	DEBUG7 (T.B.D.)

PORT_MUX

Signal	Pin	Dir
VIN_3V3	C20	
VDDIO	A12	
VDDIO_CFG	D11	
LDO_3V3	C22, D21	
VIN_LV	L20	
VOUT_LV	L18	
VRET	C16	
SS	L22	
LDO_CORE	E22	
C_CC1	M15, N16	
C_CC2	M17, N18	
RPD_G1	L14	
RPD_G2	L16	
C_USB_TP	K19	
C_USB_TN	K21	
C_USB_BP	J20	
C_USB_BN	J22	
C_SBU1	J16	
C_SBU2	H15	
DNU	E18	
DNU	C18	
DNU	F5	
DNU	D5	
DNU	D17	
DNU	G18	

POWER
UPC_XB_VDDIO_CFG
PP3V3_UPC_XB_LDO — C3208 10UF 20% 6.3V CERM-X5R 0402-1 <CLDO_3V3>
PP3V3_TBT_X_SX
UPC_XB_SS
PP1V5_UPC_XB_LDO_CORE — C3205 10UF 20% 6.3V CERM-X5R 0402-1 <CLDO_CORE>; C3209 0.68UF 5% 6.3V X6S 0402 <CSS>

TYPE-C
USBC_XB_CC1
USBC_XB_CC2
USBC_XB_CC1 — C3214 220PF 10% 16V CER-X7R 0201
USBC_XB_CC2 — C3213 220PF 10% 16V CER-X7R 0201
USBC_XB_USB_TOP_P
USBC_XB_USB_TOP_N
USBC_XB_USB_BOT_P
USBC_XB_USB_BOT_N
USBC_XB_SBU1
USBC_XB_SBU2

GND
PPDCIN_XB_G3H_F
PP20V_USBC_XB_VBUS

GND: A22, H9, N20, B21, K15, N22

CRITICAL
R3203 15K 0.1% 1/20W TF-LF 0201

REAR PORT: CONNECT UPC SPI TO ROM
FRONT PORT: GROUND UPC SPI

L3200
90-OHM-0.1A
EXCX4CE
TYPE-VBR-L
USB2_UPC_PCH_XB_P
USB2_UPC_PCH_XB_N
PLACE_NEAR=U3200:5MM

PP3V3_UPC_XB_LDO
R3209 1M 5% 1/20W MF 201 — I2C_UPC_XB_DBG_CTL_SCL
R3208 1M 5% 1/20W MF 201 — I2C_UPC_XB_DBG_CTL_SDA
R3205 1M 5% 1/20W MF 201 — UPC_XA_UART_TX

BOM_COST_GROUP=USB-C

PAGE TITLE	USB-C PORT CONTROLLER B
Apple Inc.	DRAWING NUMBER 051-04273
	SIZE D
	REVISION 4.0.0
	BRANCH evt-1
	PAGE 32 OF 500
	SHEET 29 OF 98

NOTICE OF PROPRIETARY PROPERTY:
THE INFORMATION CONTAINED HEREIN IS THE PROPRIETARY PROPERTY OF APPLE INC.
THE POSESSOR AGREES TO THE FOLLOWING:
I TO MAINTAIN THIS DOCUMENT IN CONFIDENCE
II NOT TO REPRODUCE OR COPY IT
III NOT TO REVEAL OR PUBLISH IT IN WHOLE OR PART
IV ALL RIGHTS RESERVED

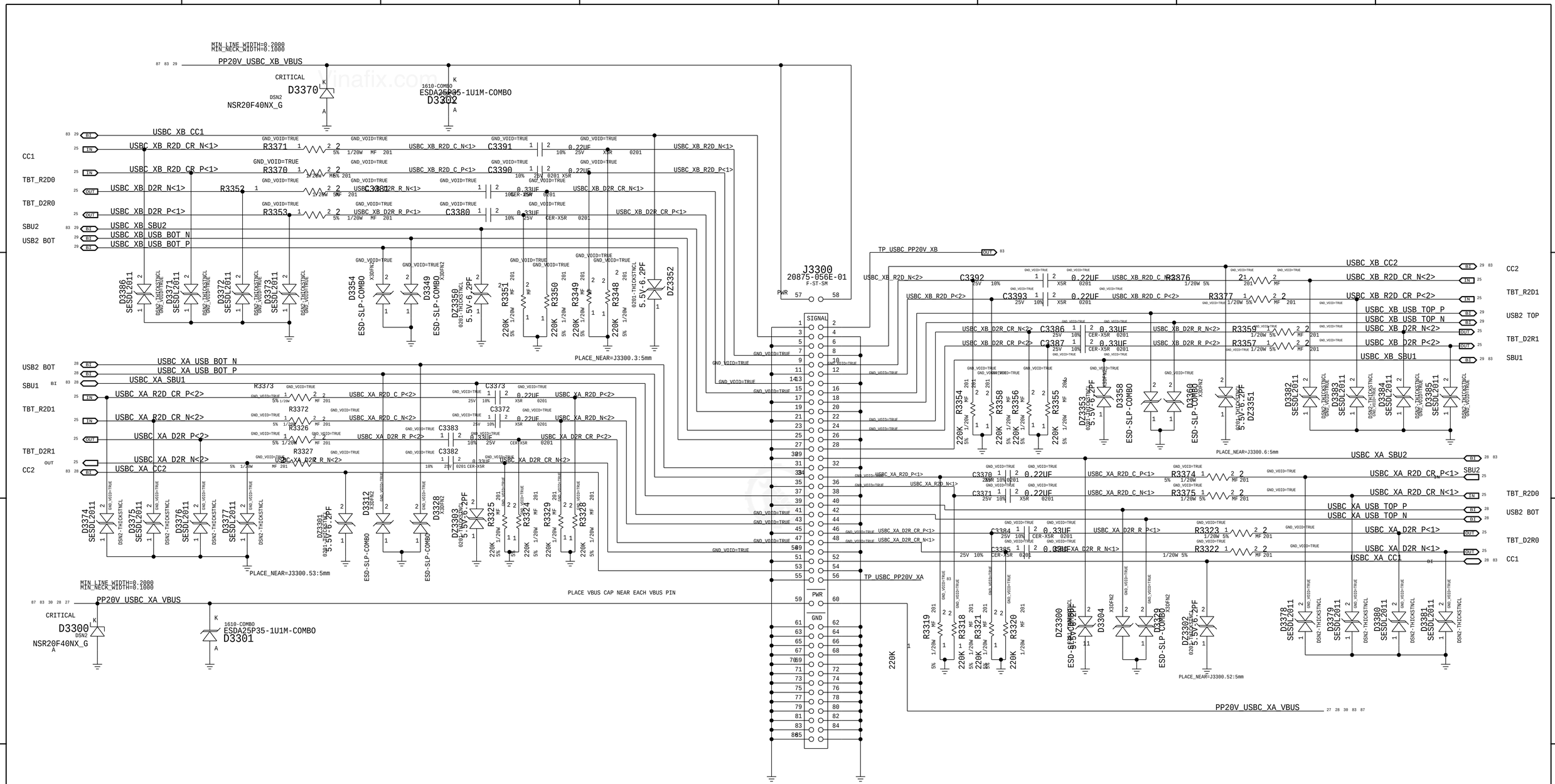

LAST CHANGE: Wed Apr 1 22:57:37 2015

PAGE TITLE

USB-C CONNECTOR A

Apple Inc.

DRAWING NUMBER 051-04273

SIZE D

REVISION 4.0.0

BRANCH evt-1

PAGE 33 OF 500

SHEET 30 OF 98

NOTICE OF PROPRIETARY PROPERTY:
THE INFORMATION CONTAINED HEREIN IS THE PROPRIETARY PROPERTY OF APPLE INC.
THE POSESSOR AGREES TO THE FOLLOWING:
I TO MAINTAIN THIS DOCUMENT IN CONFIDENCE
II NOT TO REPRODUCE OR COPY IT
III NOT TO REVEAL OR PUBLISH IT IN WHOLE OR PART
IV ALL RIGHTS RESERVED

BOM_COST_GROUP=USB-C

Vinafix.com

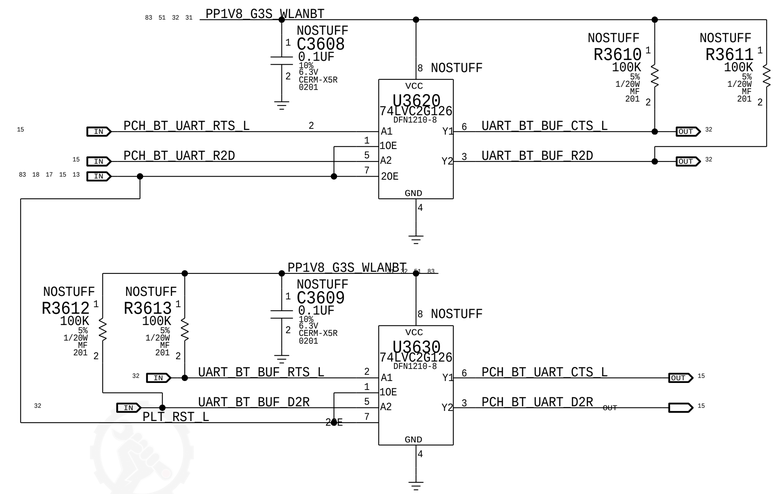

BOM_COST_GROUP=WIRELESS

PAGE TITLE

WIFI/BT SUPPORT

Apple Inc.

DRAWING NUMBER 051-04273

SIZE D

REVISION 4.0.0

BRANCH evt-1

PAGE 36 OF 500

SHEET 31 OF 98

NOTICE OF PROPRIETARY PROPERTY:
THE INFORMATION CONTAINED HEREIN IS THE PROPRIETARY PROPERTY OF APPLE INC.
THE POSESSOR AGREES TO THE FOLLOWING:
I TO MAINTAIN THIS DOCUMENT IN CONFIDENCE
II NOT TO REPRODUCE OR COPY IT
III NOT TO REVEAL OR PUBLISH IT IN WHOLE OR PART
IV ALL RIGHTS RESERVED

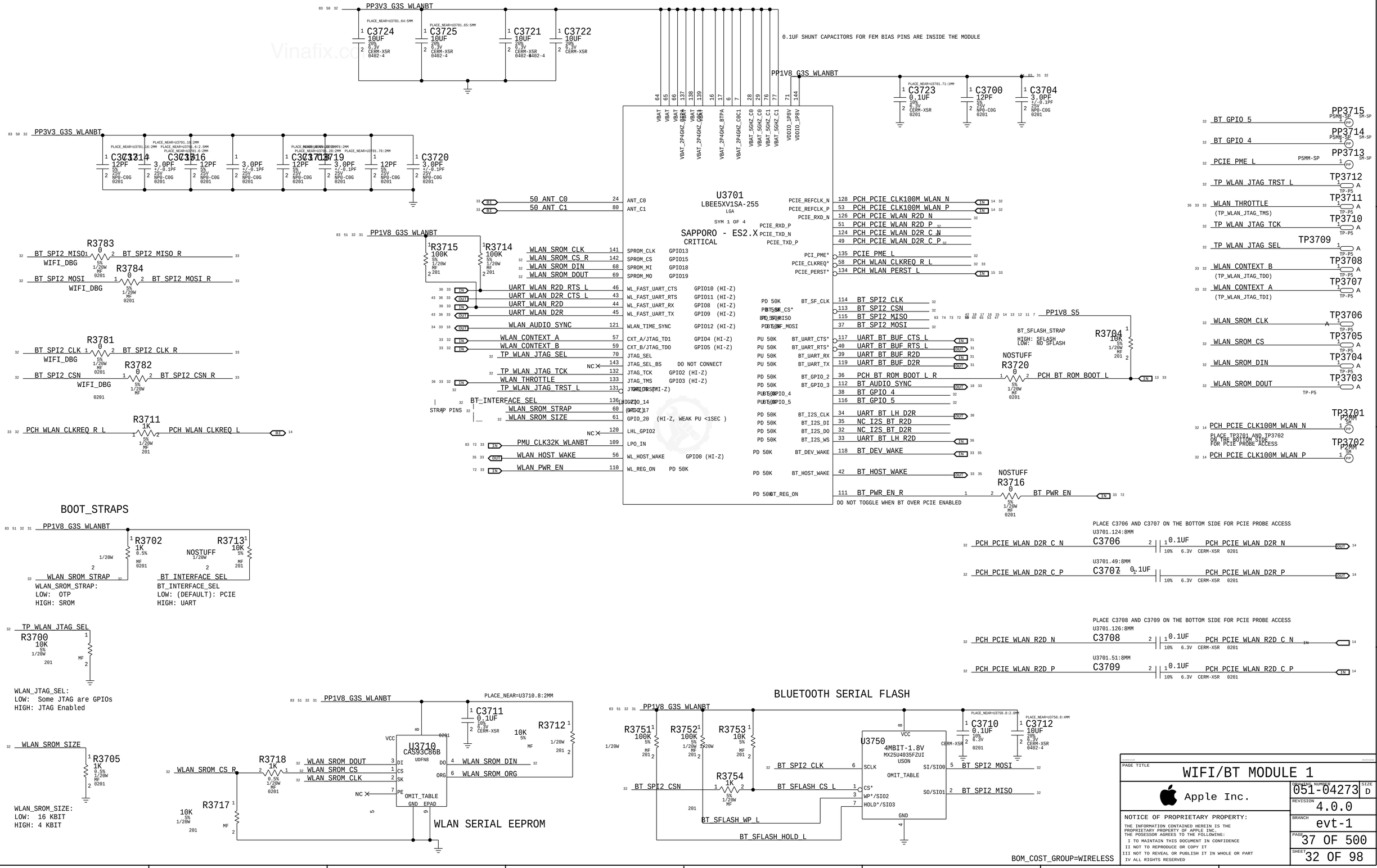
PP3V3_G3S_WLANBT
C3724 10UF 20% 6.3V CERM-X5R 0402-4
C3725 10UF 20% 6.3V CERM-X5R 0402-4
C3721 10UF 20% 6.3V CERM-X5R 0402-4
C3722 10UF 20% 6.3V CERM-X5R 0402-4
0.1UF SHUNT CAPACITORS FOR FEM BIAS PINS ARE INSIDE THE MODULE
PP1V8_G3S_WLANBT
C3723 0.1UF 10% 6.3V CERM-X5R 0201
C3700 12PF 5% 25V NP0-C0G 0201
C3704 3.0PF +/-0.1PF 25V NP0-C0G 0201
C3714 3.0PF +/-0.1PF 25V NP0-C0G 0201
C3716 12PF 5% 25V NP0-C0G 0201
C3720 3.0PF +/-0.1PF 25V NP0-C0G 0201
U3701
LBEE5XV1SA-255
LGA
SYM 1 OF 4
SAPPORO - ES2.X
CRITICAL
50_ANT_C0
50_ANT_C1
PP1V8_G3S_WLANBT
R3715 100K 5% 1/20W MF 201
R3714 100K 5% 1/20W MF 201
WLAN_SROM_CLK
WLAN_SROM_CS_R
WLAN_SROM_DIN
WLAN_SROM_DOUT
UART_WLAN_R2D_RTS_L
UART_WLAN_R2D_CTS_L
UART_WLAN_R2D
UART_WLAN_D2R
WLAN_AUDIO_SYNC
WLAN_CONTEXT_A
WLAN_CONTEXT_B
TP_WLAN_JTAG_SEL
TP_WLAN_JTAG_TCK
WLAN_THROTTLE
TP_WLAN_JTAG_TRST_L
BT_INTERFACE_SEL
WLAN_SROM_STRAP
WLAN_SROM_SIZE
STRAP PINS
PMU_CLK32K_WLANBT
WLAN_HOST_WAKE
WLAN_PWR_EN
PCH_PCIE_CLK100M_WLAN_N
PCH_PCIE_CLK100M_WLAN_P
PCH_PCIE_WLAN_R2D_N
PCH_PCIE_WLAN_R2D_P
PCH_PCIE_WLAN_D2R_N
PCH_PCIE_WLAN_D2R_P
PCIE_PME_L
PCH_WLAN_CLKREQ_R_L
PCH_WLAN_PERST_L
BT_SPI2_CLK
BT_SPI2_CSN
BT_SPI2_MISO
BT_SPI2_MOSI
UART_BT_BUF_CTS_L
UART_BT_BUF_RTS_L
UART_BT_BUF_R2D
UART_BT_BUF_D2R
PCH_BT_ROM_BOOT_L_R
BT_AUDIO_SYNC
BT_GPIO_4
BT_GPIO_5
UART_BT_LH_D2R
NC_I2S_BT_R2D
NC_I2S_BT_D2R
UART_BT_LH_R2D
BT_DEV_WAKE
BT_HOST_WAKE
BT_PWR_EN_R
DO NOT TOGGLE WHEN BT OVER PCIE ENABLED
BT_GPIO_5
BT_GPIO_4
PCH_PCIE_CLK100M_WLAN_N
PCH_PCIE_CLK100M_WLAN_P
PCH_PCIE_WLAN_R2D_N
PCH_PCIE_WLAN_R2D_P
PCH_PCIE_WLAN_D2R_N
PCH_PCIE_WLAN_D2R_P
PCIE_PME_L
TP_WLAN_JTAG_TRST_L
WLAN_THROTTLE
(TP_WLAN_JTAG_TMS)
TP_WLAN_JTAG_TCK
TP_WLAN_JTAG_SEL
WLAN_CONTEXT_B
(TP_WLAN_JTAG_TDO)
WLAN_CONTEXT_A
(TP_WLAN_JTAG_TDI)
WLAN_SROM_CLK
WLAN_SROM_CS
WLAN_SROM_DIN
WLAN_SROM_DOUT
PP1V8_S5
BT_SFLASH_STRAP
HIGH: SFLASH
LOW: NO SFLASH
R3704 10K 5% 1/20W MF 201
NOSTUFF
R3720 0 5% 1/20W MF 0201
PCH_BT_ROM_BOOT_L
NOSTUFF
R3716 0 5% 1/20W MF 0201
BT_PWR_EN
PLACE TP3701 AND TP3702 ON THE BOTTOM SIDE FOR PCIE PROBE ACCESS
R3783 0 5% 1/20W MF 0201
BT_SPI2_MISO
WIFI_DBG
BT_SPI2_MISO_R
R3784 0 5% 1/20W MF 0201
BT_SPI2_MOSI
BT_SPI2_MOSI_R
R3781 0 5% 1/20W MF 0201
BT_SPI2_CLK
BT_SPI2_CLK_R
R3782 0 5% 1/20W MF 0201
BT_SPI2_CSN
BT_SPI2_CSN_R
R3711 1K 5% 1/20W MF 201
PCH_WLAN_CLKREQ_R_L
PCH_WLAN_CLKREQ_L
BOOT_STRAPS
R3702 1K 0.5% 1/20W MF 0201
R3713 10K 5% 1/20W MF 201
NOSTUFF
WLAN_SROM_STRAP
WLAN_SROM_STRAP:
LOW: OTP
HIGH: SROM
BT_INTERFACE_SEL
BT_INTERFACE_SEL
LOW: (DEFAULT): PCIE
HIGH: UART
TP_WLAN_JTAG_SEL
R3700 10K 5% 1/20W MF 201
WLAN_JTAG_SEL:
LOW: Some JTAG are GPIOs
HIGH: JTAG Enabled
WLAN_SROM_SIZE
R3705 1K 0.5% 1/20W MF 0201
WLAN_SROM_SIZE:
LOW: 16 KBIT
HIGH: 4 KBIT
PLACE C3706 AND C3707 ON THE BOTTOM SIDE FOR PCIE PROBE ACCESS
U3701.124:8MM
C3706 0.1UF 10% 6.3V CERM-X5R 0201
U3701.49:8MM
C3707 0.1UF 10% 6.3V CERM-X5R 0201
PLACE C3708 AND C3709 ON THE BOTTOM SIDE FOR PCIE PROBE ACCESS
U3701.126:8MM
C3708 0.1UF 10% 6.3V CERM-X5R 0201
U3701.51:8MM
C3709 0.1UF 10% 6.3V CERM-X5R 0201
PP1V8_G3S_WLANBT
PLACE_NEAR=U3710.8:2MM
C3711 0.1UF 10% 6.3V CERM-X5R
R3712 10K 5% 1/20W MF 201
U3710
CAS93C86B
UDFN8
OMIT_TABLE
R3718 1K 0.5% 1/20W MF 0201
R3717 10K 5% 1/20W MF 201
WLAN_SROM_CS_R
WLAN_SROM_DOUT
WLAN_SROM_CS
WLAN_SROM_CLK
WLAN_SROM_DIN
WLAN_SROM_ORG
WLAN SERIAL EEPROM
BLUETOOTH SERIAL FLASH
PP1V8_G3S_WLANBT
R3751 100K 5% 1/20W MF 201
R3752 100K 5% 1/20W MF 201
R3753 10K 5% 1/20W MF 201
R3754 1K 5% 1/20W MF 201
U3750
4MBIT-1.8V
MX25U4035FZUI
USON
OMIT_TABLE
C3710 0.1UF 10% 6.3V CERM-X5R 0201
C3712 10UF 20% 6.3V CERM-X5R 0402-4
BT_SPI2_CLK
BT_SPI2_CSN
BT_SFLASH_CS_L
BT_SFLASH_WP_L
BT_SFLASH_HOLD_L
BT_SPI2_MOSI
BT_SPI2_MISO
BOM_COST_GROUP=WIRELESS
PAGE TITLE
WIFI/BT MODULE 1
Apple Inc.
DRAWING NUMBER 051-04273
SIZE D
REVISION 4.0.0
BRANCH evt-1
PAGE 37 OF 500
SHEET 32 OF 98
NOTICE OF PROPRIETARY PROPERTY:
THE INFORMATION CONTAINED HEREIN IS THE PROPRIETARY PROPERTY OF APPLE INC.
THE POSESSOR AGREES TO THE FOLLOWING:
I TO MAINTAIN THIS DOCUMENT IN CONFIDENCE
II NOT TO REPRODUCE OR COPY IT
III NOT TO REVEAL OR PUBLISH IT IN WHOLE OR PART
IV ALL RIGHTS RESERVED

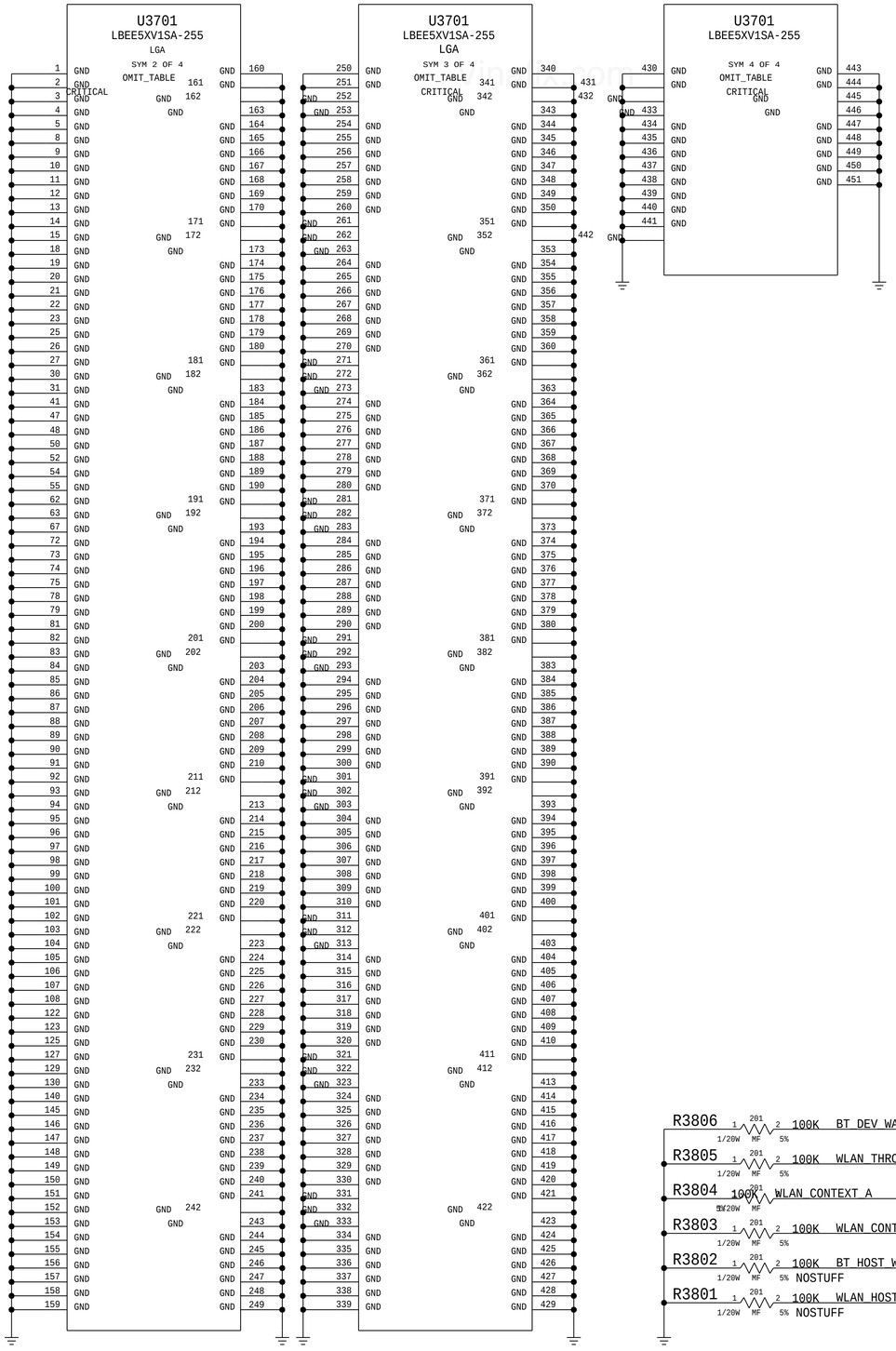

RF CONNECTORS

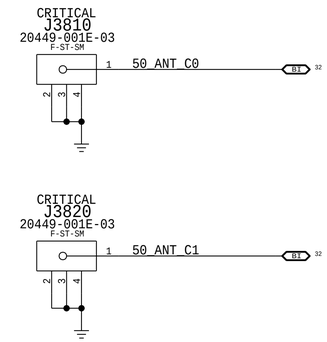

WIFI BT DEBUG CONNECTORS

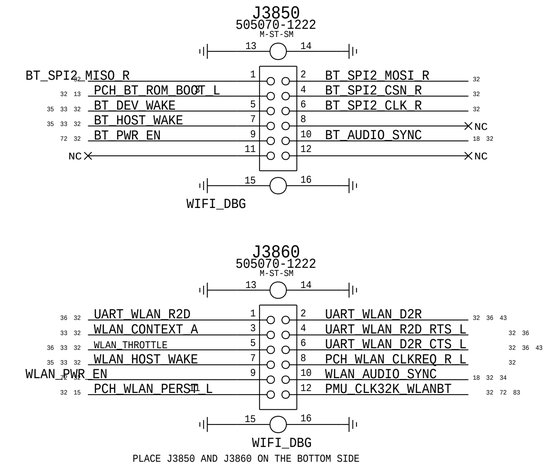

PLACE J3850 AND J3860 ON THE BOTTOM SIDE

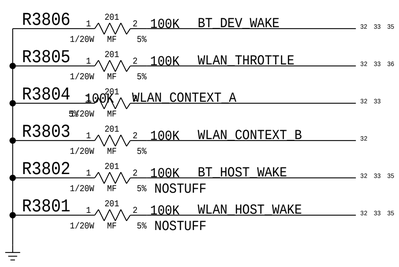

BOM_COST_GROUP=WIRELESS

PAGE TITLE
WIFI/BT MODULE 2

Apple Inc.

DRAWING NUMBER 051-04273 SIZE D

REVISION 4.0.0

BRANCH evt-1

PAGE 38 OF 500

SHEET 33 OF 98

NOTICE OF PROPRIETARY PROPERTY:
THE INFORMATION CONTAINED HEREIN IS THE PROPRIETARY PROPERTY OF APPLE INC.
THE POSESSOR AGREES TO THE FOLLOWING:
I TO MAINTAIN THIS DOCUMENT IN CONFIDENCE
II NOT TO REPRODUCE OR COPY IT
III NOT TO REVEAL OR PUBLISH IT IN WHOLE OR PART
IV ALL RIGHTS RESERVED

Note IPU/IPD represents SW configured state, not HW default

Vinafix.com

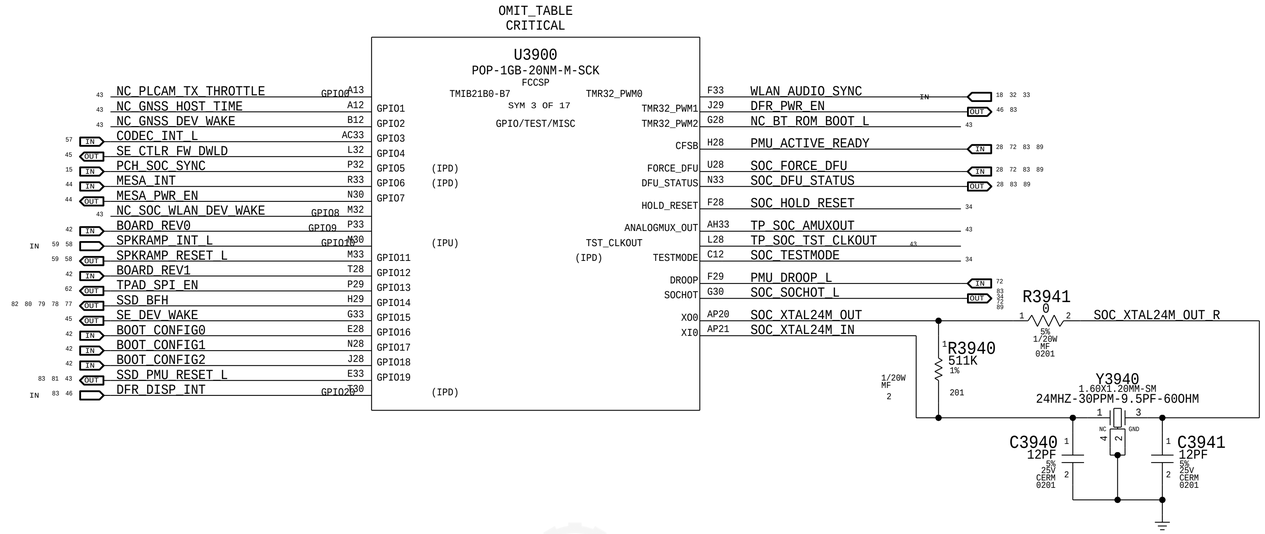

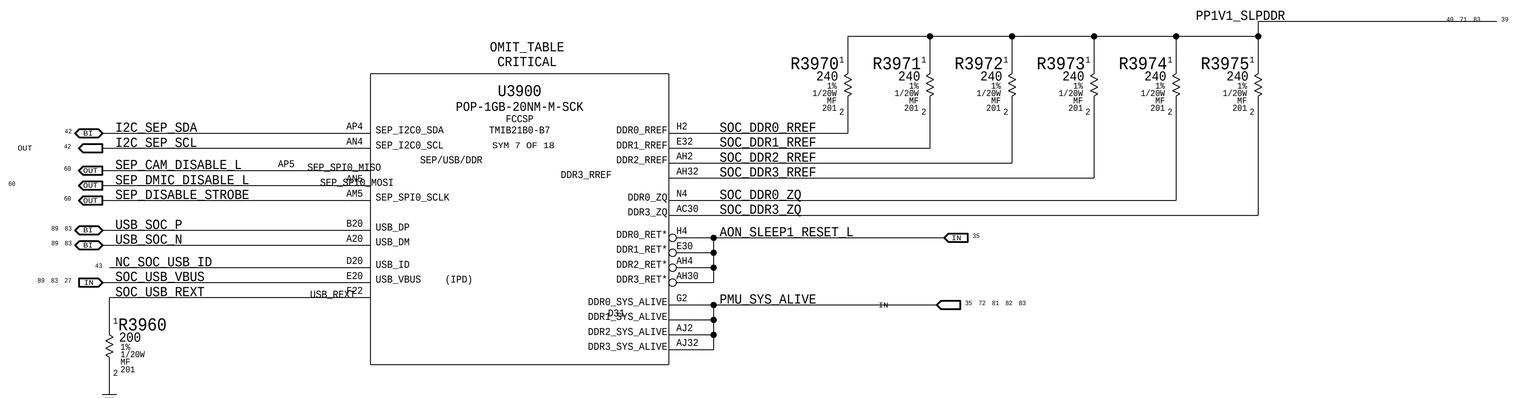

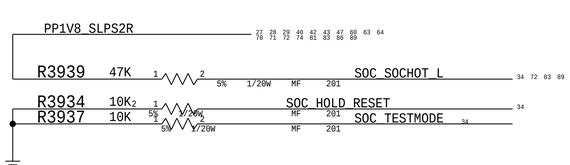

BOM_COST_GROUP=SOC

PAGE TITLE	SOC GPIO/SEP/USB/DDR/TEST
	Apple Inc.
DRAWING NUMBER	051-04273
SIZE	D
REVISION	4.0.0
BRANCH	evt-1
PAGE	39 OF 500
SHEET	34 OF 98

NOTICE OF PROPRIETARY PROPERTY:
THE INFORMATION CONTAINED HEREIN IS THE PROPRIETARY PROPERTY OF APPLE INC.
THE POSESSOR AGREES TO THE FOLLOWING:
I TO MAINTAIN THIS DOCUMENT IN CONFIDENCE
II NOT TO REPRODUCE OR COPY IT
III NOT TO REVEAL OR PUBLISH IT IN WHOLE OR PART
IV ALL RIGHTS RESERVED

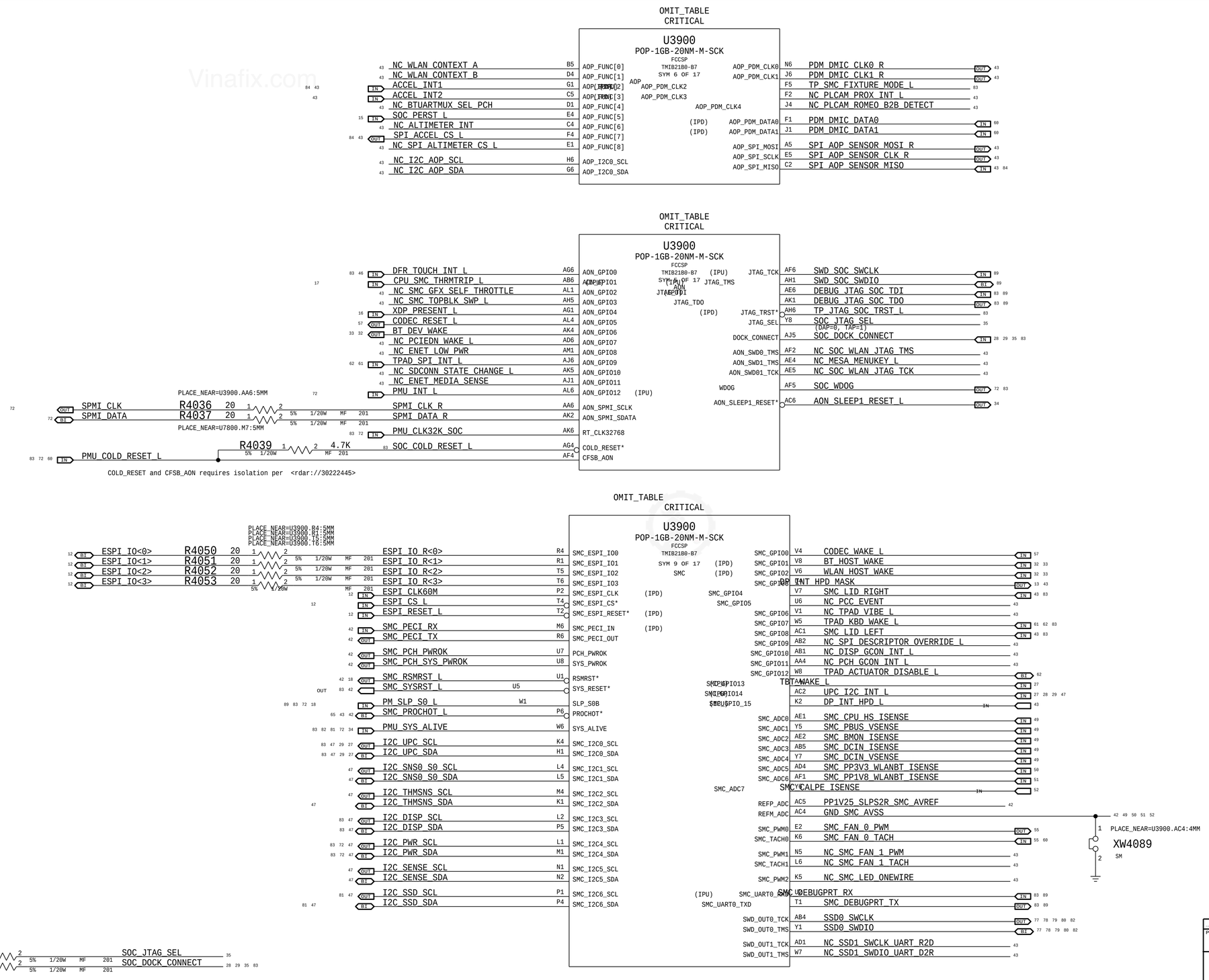

BOM_COST_GROUP=SOC

PAGE TITLE
SOC AOP/AON/SMC

Apple Inc.

DRAWING NUMBER 051-04273
SIZE D
REVISION 4.0.0
BRANCH evt-1
PAGE 40 OF 500
SHEET 35 OF 98

NOTICE OF PROPRIETARY PROPERTY:
THE INFORMATION CONTAINED HEREIN IS THE PROPRIETARY PROPERTY OF APPLE INC.
THE POSESSOR AGREES TO THE FOLLOWING:
I TO MAINTAIN THIS DOCUMENT IN CONFIDENCE
II NOT TO REPRODUCE OR COPY IT
III NOT TO REVEAL OR PUBLISH IT IN WHOLE OR PART
IV ALL RIGHTS RESERVED

Vinafix.com

OMIT_TABLE
CRITICAL

U3900
POP-1GB-20NM-M-SCK
FCCSP
TMIB21B0-B7
SYM 4 OF 17
ISP

84 76 IN	MIPI FTCAM DATA P<0>	B24	MIPI0C_DATA0_P		ISP_I2C0_SDA	I2C FTCAM SDA 48 BI
84 76 IN	MIPI FTCAM DATA N<0>	A24	MIPI0C_DATA0_N		ISP_I2C0_SCL	AD33 I2C FTCAM SCL 48 OUT
		B22	MIPI0C_DATA1_P		ISP_I2C1_SDA	AA29 NC I2C PLCAM SDA 43
		A22	MIPI0C_DATA1_N		ISP_I2C1_SCL	AD30 NC I2C PLCAM SCL 43
84 76 IN	MIPI FTCAM CLK P	B23	MIPI0C_CLK_P		SENSOR0_CLK	AF32 NC FTCAM CLK12M R 43
84 76 IN	MIPI FTCAM CLK N	A23	MIPI0C_CLK_N		SENSOR0_RST	AF30 NC FTCAM RESET L 43
		B25	MIPI1C_DATA0_P		SENSOR0_ISTRB	AC29 DFR TOUCH RESET L 46 83 OUT
		A25	MIPI1C_DATA0_N		SENSOR1_CLK	AA28 NC PLCAM RX CLK12M R 43
		B27	MIPI1C_DATA1_P		SENSOR1_RST	AB30 NC PLCAM RX RESET L 43
		A27	MIPI1C_DATA1_N		SENSOR1_ISTRB	AF33 DFR DISP RESET L 46 83 OUT
		B26	MIPI1C_CLK_P		SENSOR2_CLK	AB28 NC PLCAM TX CLK12M R 43
		A26	MIPI1C_CLK_N		SENSOR2_RST	AD28 NC PLCAM TX RESET L 43
					SENSOR_INT	W28 NC PLCAM TX INT 43
46 OUT	MIPI DFR DATA P	B30	MIPID_DATA0_P	(IPD)	DISP_TE	D33 DFR DISP TE 46 83 IN
46 OUT	MIPI DFR DATA N	A30	MIPID_DATA0_N			
46 OUT	MIPI DFR CLK P	B29	MIPID_CLK_P		DISP_VSYNC	L30 BOARD REV2 42 IN
46 OUT	MIPI DFR CLK N	A29	MIPID_CLK_N		CLK32K_OUT	AF29 DFR TOUCH CLK32K RESET L 46 83 OUT
	SOC MIPI0C REXT	F23	MIPI0C_REXT			
	SOC MIPI1C REXT	F25	MIPI1C_REXT			
	SOC MIPID REXT	F26	MIPID_REXT			

[1]R4100 4.02K 1% 1/20W MF 201 2
[1]R4101 4.02K 1% 1/20W MF 201 2
[1]R4102 4.02K 1% 1/20W MF 201 2

PLACE_NEAR=U3900.F23:5MM PLACE_NEAR=U3900.F26:5MM
PLACE_NEAR=U3900.F25:5MM

OMIT_TABLE
CRITICAL

U3900
POP-1GB-20NM-M-SCK
FCCSP
TMIB21B0-B7
SYM 2 OF 17
SPI0_MOSI
I2C/UART/SPI/I2S

58 48 BI	I2C SPKRAMP L SDA	W33	I2C0_SDA		SPI0_MISO	AM4 SPI SOCROM MISO 42 IN
58 48 OUT	I2C SPKRAMP L SCL	U30	I2C0_SCL		SPI0_MOSI	AN3 SPI SOCROM MOSI 42 OUT
59 48 BI	I2C SPKRAMP R SDA	AB32	I2C1_SDA		SPI0_SCLK	AN3 SPI SOCROM CLK R 42 OUT
59 48 OUT	I2C SPKRAMP R SCL	V30	I2C1_SCL		SPI0_SSIN	AP6 SPI SOCROM CS L 42 OUT
57 48 BI	I2C CODEC SDA	H30	I2C2_SDA	(IPU)	SPI1_MISO	K30 SPI TPAD MISO 42 43 IN
57 48 OUT	I2C CODEC SCL	P28	I2C2_SCL		SPI1_MOSI	J30 SPI TPAD MOSI R 43 OUT
48 BI	I2C ALS SDA	V28	I2C3_SDA		SPI1_SCLK	K33 SPI TPAD CLK R 43 OUT
48 OUT	I2C ALS SCL	AB33	I2C3_SCL		SPI1_SSIN	R28 SPI TPAD CS L 62 OUT
48 BI	I2C DFR SDA	L33	I2C4_SDA		SPI2_MISO	B17 SPI MESA MISO 44 IN
48 OUT	I2C DFR SCL	R29	I2C4_SCL	SPI2_SCLK	SPI2_MOSI	C17 SPI MESA MOSI R 43 OUT
	NC I2C SOC 5 SDA	M29	I2C5_SDA			D16 SPI MESA CLK R 43 OUT
	NC I2C SOC 5 SCL	R30	I2C5_SCL		SPI2_SSIN	A17 WLAN THROTTLE 32 33 OUT
83 59 IN	SPKR ID1	J33	I2C6_SDA (IPU)		SPI3_MISO	C14 SPI DFR MISO 43 IN
83 58 IN	SPKR ID0	L29	I2C6_SCL (IPU)		SPI3_MOSI	D15 SPI DFR MOSI R 43 OUT
					SPI3_SCLK	C16 SPI DFR CLK R 43 OUT
					SPI3_SSIN	A16 SPI DFR CS L 46 83 OUT
89 83	SOC DEBUGPRT RX	V32	UART0_RXD (IPU)	(IPD)	I2S0_DIN	Y28 I2S SPKRAMP L D2R 58 59 IN
89 83	SOC DEBUGPRT TX	U32	UART0_TXD		I2S0_DOUT	AC32 I2S SPKRAMP L R2D R 43 OUT
45 IN	UART SE D2R	B15	UART1_RXD		I2S0_BCLK	I2S SPKRAMP L BCLK R 43 OUT
45 OUT	UART SE R2D	A15	UART1_TXD	I2S0_LRCK	I2S SPKRAMP L LRCLK	AE32 43 OUT
45 IN	UART SE D2R CTS L	D13	UART1_CTS*		I2S0_MCK	AM33 NC DFR TOUCH RSVD 43
45 OUT	UART SE R2D RTS L	E12	UART1_RTS*		I2S1_DIN	C18 I2S SPKRAMP R D2R 43 IN
43	NC UART BT D2R	F32	UART2_RXD		I2S1_DOUT	E17 I2S SPKRAMP R R2D R 43 OUT
43	NC UART BT R2D	F30	UART2_TXD		I2S1_BCLK	D17 I2S SPKRAMP R BCLK R 43 OUT
43	NC UART BT D2R CTS L	M28	UART2_CTS*		I2S1_LRCK	B18 I2S SPKRAMP R LRCLK 43 OUT
43	NC UART BT R2D RTS L	K28	UART2_RTS*		I2S1_MCK	D18 NC PCHROM SW EN 43
32 IN	UART BT LH D2R	H32	UART3_RXD	(IPD)	I2S2_DIN	Y33 I2S CODEC D2R 57 IN
32 OUT	UART BT LH R2D	J32	UART3_TXD		I2S2_DOUT	I2S CODEC R2D R 43 OUT
43	NC UART GNSS D2R CTS L	H33	UART3_CTS*	I2S2_BCLK	I2S CODEC BCLK R	43 OUT
43	NC UART GNSS R2D RTS L	P30	UART3_RTS*		I2S2_LRCK	V29 I2S CODEC LRCLK 43 OUT
43 33 32 IN	UART WLAN D2R	B14	UART4_RXD		I2S2_MCK	AL30 NC I2S CODEC MCLK 43
33 32 OUT	UART WLAN R2D	A14	UART4_TXD		I2S3_DIN	R32 NC I2S HAWKING D2R 43
43 33 32 IN	UART WLAN D2R CTS L	C13	UART4_CTS*		I2S3_DOUT	U33 NC I2S CODEC1 R2D R 43
33 32 OUT	UART WLAN R2D RTS L	D12	UART4_RTS*		I2S3_BCLK	T33 NC I2S HAWKING BCLK R 43
					I2S3_LRCK	U29 NC I2S HAWKING LRCLK 43
					I2S3_MCK	V33 NC I2S CODEC1 MCLK 43

R4171 20 1 5% 1/20W MF 201 2 — PLACE_NEAR=U3900.AM4:5MM
R4172 20 1 5% 1/20W MF 201 2 — PLACE_NEAR=U3900.AN3:5MM
SPI SOCROM MOSI
SPI SOCROM CLK

BOM_COST_GROUP=SOC

PAGE TITLE	SOC ISP/I2C/UART/SPI/I2S
Apple Inc.	DRAWING NUMBER 051-04273 — SIZE D
	REVISION 4.0.0
	BRANCH evt-1
	PAGE 41 OF 500
	SHEET 36 OF 98

NOTICE OF PROPRIETARY PROPERTY:
THE INFORMATION CONTAINED HEREIN IS THE PROPRIETARY PROPERTY OF APPLE INC.
THE POSESSOR AGREES TO THE FOLLOWING:
I TO MAINTAIN THIS DOCUMENT IN CONFIDENCE
II NOT TO REPRODUCE OR COPY IT
III NOT TO REVEAL OR PUBLISH IT IN WHOLE OR PART
IV ALL RIGHTS RESERVED

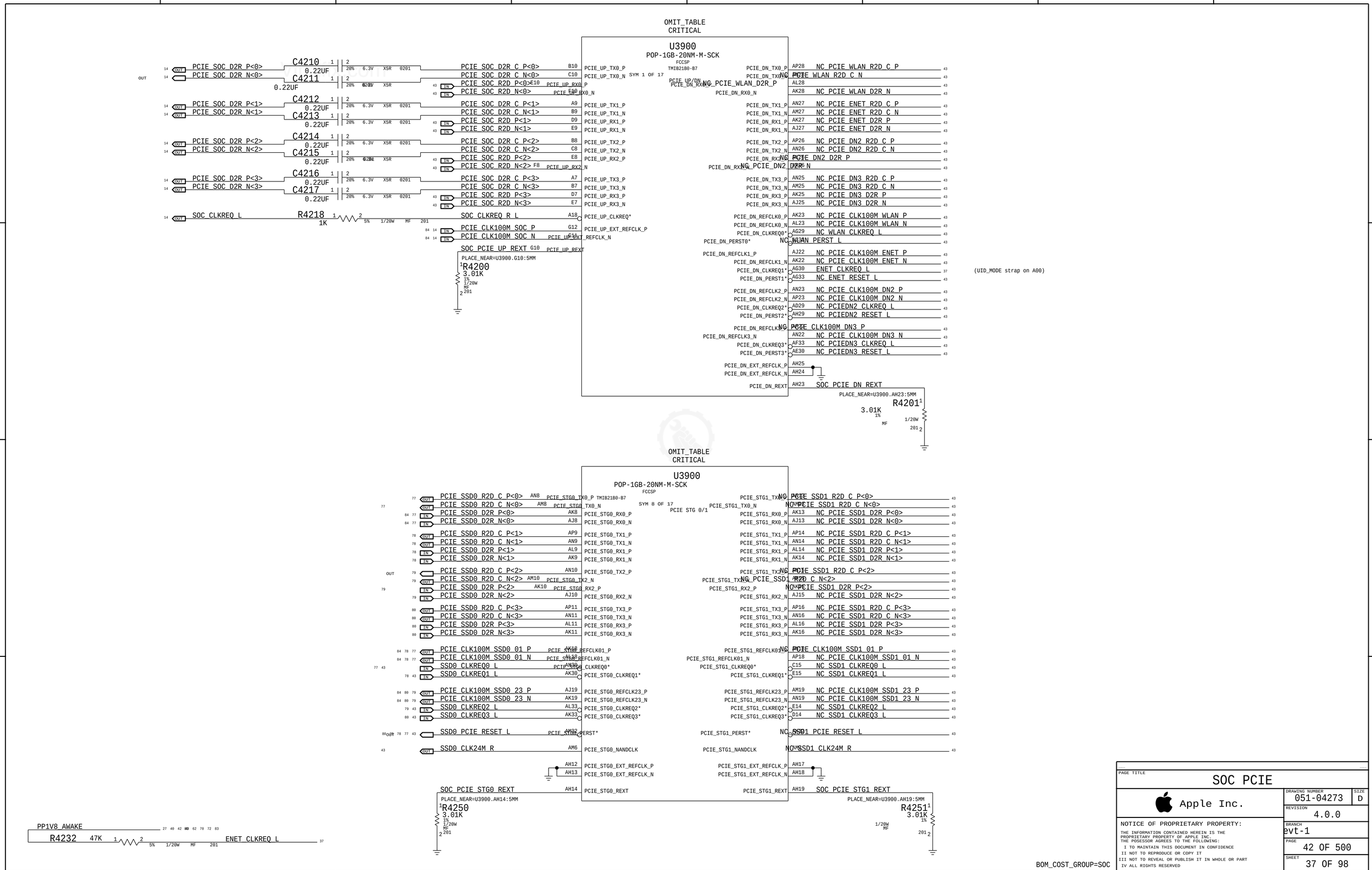
OMIT_TABLE
CRITICAL
U3900
POP-1GB-20NM-M-SCK
FCCSP
SYM 1 OF 17
PCIE SOC D2R P<0>
PCIE SOC D2R N<0>
PCIE SOC D2R P<1>
PCIE SOC D2R N<1>
PCIE SOC D2R P<2>
PCIE SOC D2R N<2>
PCIE SOC D2R P<3>
PCIE SOC D2R N<3>
SOC CLKREQ L
C4210 0.22UF
C4211 0.22UF
C4212 0.22UF
C4213 0.22UF
C4214 0.22UF
C4215 0.22UF
C4216 0.22UF
C4217 0.22UF
R4218 1K
PCIE SOC D2R C P<0>
PCIE SOC D2R C N<0>
PCIE SOC D2R P<0>
PCIE SOC D2R N<0>
PCIE SOC D2R C P<1>
PCIE SOC D2R C N<1>
PCIE SOC D2R P<1>
PCIE SOC D2R N<1>
PCIE SOC D2R C P<2>
PCIE SOC D2R C N<2>
PCIE SOC D2R P<2>
PCIE SOC D2R N<2>
PCIE SOC D2R C P<3>
PCIE SOC D2R C N<3>
PCIE SOC D2R P<3>
PCIE SOC D2R N<3>
SOC CLKREQ R L
PCIE CLK100M SOC P
PCIE CLK100M SOC N
SOC PCIE UP REXT
PLACE_NEAR=U3900.G10:5MM
R4200 3.01K
PCIE_UP_TX0_P
PCIE_UP_TX0_N
PCIE_UP_RX0_P
PCIE_UP_RX0_N
PCIE_UP_TX1_P
PCIE_UP_TX1_N
PCIE_UP_RX1_P
PCIE_UP_RX1_N
PCIE_UP_TX2_P
PCIE_UP_TX2_N
PCIE_UP_RX2_P
PCIE_UP_RX2_N
PCIE_UP_TX3_P
PCIE_UP_TX3_N
PCIE_UP_RX3_P
PCIE_UP_RX3_N
PCIE_UP_CLKREQ*
PCIE_UP_EXT_REFCLK_P
PCIE_UP_EXT_REFCLK_N
PCIE_DN_TX0_P
PCIE_DN_TX0_N
PCIE_DN_RX0_P
PCIE_DN_RX0_N
PCIE_DN_TX1_P
PCIE_DN_TX1_N
PCIE_DN_RX1_P
PCIE_DN_RX1_N
PCIE_DN_TX2_P
PCIE_DN_TX2_N
PCIE_DN_RX2_P
PCIE_DN_RX2_N
PCIE_DN_TX3_P
PCIE_DN_TX3_N
PCIE_DN_RX3_P
PCIE_DN_RX3_N
PCIE_DN_REFCLK0_P
PCIE_DN_REFCLK0_N
PCIE_DN_CLKREQ0*
PCIE_DN_PERST0*
PCIE_DN_REFCLK1_P
PCIE_DN_REFCLK1_N
PCIE_DN_CLKREQ1*
PCIE_DN_PERST1*
PCIE_DN_REFCLK2_P
PCIE_DN_REFCLK2_N
PCIE_DN_CLKREQ2*
PCIE_DN_PERST2*
PCIE_DN_REFCLK3_P
PCIE_DN_REFCLK3_N
PCIE_DN_CLKREQ3*
PCIE_DN_PERST3*
PCIE_DN_EXT_REFCLK_P
PCIE_DN_EXT_REFCLK_N
PCIE_DN_REXT
NC PCIE WLAN R2D C P
NC PCIE WLAN R2D C N
NC PCIE WLAN D2R N
NC PCIE ENET R2D C P
NC PCIE ENET R2D C N
NC PCIE ENET D2R P
NC PCIE ENET D2R N
NC PCIE DN2 R2D C P
NC PCIE DN2 R2D C N
NC PCIE DN2 D2R P
NC PCIE DN2 D2R N
NC PCIE DN3 R2D C P
NC PCIE DN3 R2D C N
NC PCIE DN3 D2R P
NC PCIE DN3 D2R N
NC PCIE CLK100M WLAN P
NC PCIE CLK100M WLAN N
NC WLAN CLKREQ L
NC WLAN PERST L
NC PCIE CLK100M ENET P
NC PCIE CLK100M ENET N
ENET CLKREQ L
NC ENET RESET L
NC PCIE CLK100M DN2 P
NC PCIE CLK100M DN2 N
NC PCIEDN2 CLKREQ L
NC PCIEDN2 RESET L
NC PCIE CLK100M DN3 P
NC PCIE CLK100M DN3 N
NC PCIEDN3 CLKREQ L
NC PCIEDN3 RESET L
SOC PCIE DN REXT
PLACE_NEAR=U3900.AH23:5MM
R4201 3.01K
(UID_MODE strap on A00)
OMIT_TABLE
CRITICAL
U3900
POP-1GB-20NM-M-SCK
FCCSP
SYM 8 OF 17
PCIE STG 0/1
PCIE SSD0 R2D C P<0>
PCIE SSD0 R2D C N<0>
PCIE SSD0 D2R P<0>
PCIE SSD0 D2R N<0>
PCIE SSD0 R2D C P<1>
PCIE SSD0 R2D C N<1>
PCIE SSD0 D2R P<1>
PCIE SSD0 D2R N<1>
PCIE SSD0 R2D C P<2>
PCIE SSD0 R2D C N<2>
PCIE SSD0 D2R P<2>
PCIE SSD0 D2R N<2>
PCIE SSD0 R2D C P<3>
PCIE SSD0 R2D C N<3>
PCIE SSD0 D2R P<3>
PCIE SSD0 D2R N<3>
PCIE CLK100M SSD0 01 P
PCIE CLK100M SSD0 01 N
SSD0 CLKREQ0 L
SSD0 CLKREQ1 L
PCIE CLK100M SSD0 23 P
PCIE CLK100M SSD0 23 N
SSD0 CLKREQ2 L
SSD0 CLKREQ3 L
SSD0 PCIE RESET L
SSD0 CLK24M R
SOC PCIE STG0 REXT
PLACE_NEAR=U3900.AH14:5MM
R4250 3.01K
PCIE_STG0_TX0_P
PCIE_STG0_TX0_N
PCIE_STG0_RX0_P
PCIE_STG0_RX0_N
PCIE_STG0_TX1_P
PCIE_STG0_TX1_N
PCIE_STG0_RX1_P
PCIE_STG0_RX1_N
PCIE_STG0_TX2_P
PCIE_STG0_TX2_N
PCIE_STG0_RX2_P
PCIE_STG0_RX2_N
PCIE_STG0_TX3_P
PCIE_STG0_TX3_N
PCIE_STG0_RX3_P
PCIE_STG0_RX3_N
PCIE_STG0_REFCLK01_P
PCIE_STG0_REFCLK01_N
PCIE_STG0_CLKREQ0*
PCIE_STG0_CLKREQ1*
PCIE_STG0_REFCLK23_P
PCIE_STG0_REFCLK23_N
PCIE_STG0_CLKREQ2*
PCIE_STG0_CLKREQ3*
PCIE_STG0_PERST*
PCIE_STG0_NANDCLK
PCIE_STG0_EXT_REFCLK_P
PCIE_STG0_EXT_REFCLK_N
PCIE_STG0_REXT
NC PCIE SSD1 R2D C P<0>
NC PCIE SSD1 R2D C N<0>
NC PCIE SSD1 D2R P<0>
NC PCIE SSD1 D2R N<0>
NC PCIE SSD1 R2D C P<1>
NC PCIE SSD1 R2D C N<1>
NC PCIE SSD1 D2R P<1>
NC PCIE SSD1 D2R N<1>
NC PCIE SSD1 R2D C P<2>
NC PCIE SSD1 R2D C N<2>
NC PCIE SSD1 D2R P<2>
NC PCIE SSD1 D2R N<2>
NC PCIE SSD1 R2D C P<3>
NC PCIE SSD1 R2D C N<3>
NC PCIE SSD1 D2R P<3>
NC PCIE SSD1 D2R N<3>
NC PCIE CLK100M SSD1 01 P
NC PCIE CLK100M SSD1 01 N
NC SSD1 CLKREQ0 L
NC SSD1 CLKREQ1 L
NC PCIE CLK100M SSD1 23 P
NC PCIE CLK100M SSD1 23 N
NC SSD1 CLKREQ2 L
NC SSD1 CLKREQ3 L
NC SSD1 PCIE RESET L
NC SSD1 CLK24M R
SOC PCIE STG1 REXT
PLACE_NEAR=U3900.AH19:5MM
R4251 3.01K
PP1V8_AWAKE
R4232 47K
ENET CLKREQ L
BOM_COST_GROUP=SOC
PAGE TITLE
SOC PCIE
Apple Inc.
DRAWING NUMBER 051-04273
SIZE D
REVISION 4.0.0
BRANCH evt-1
PAGE 42 OF 500
SHEET 37 OF 98
NOTICE OF PROPRIETARY PROPERTY:
THE INFORMATION CONTAINED HEREIN IS THE PROPRIETARY PROPERTY OF APPLE INC.
THE POSESSOR AGREES TO THE FOLLOWING:
I TO MAINTAIN THIS DOCUMENT IN CONFIDENCE
II NOT TO REPRODUCE OR COPY IT
III NOT TO REVEAL OR PUBLISH IT IN WHOLE OR PART
IV ALL RIGHTS RESERVED

Current estimates @ 105C & 2GB from Gibraltar Power Specification Rev 0.5.3

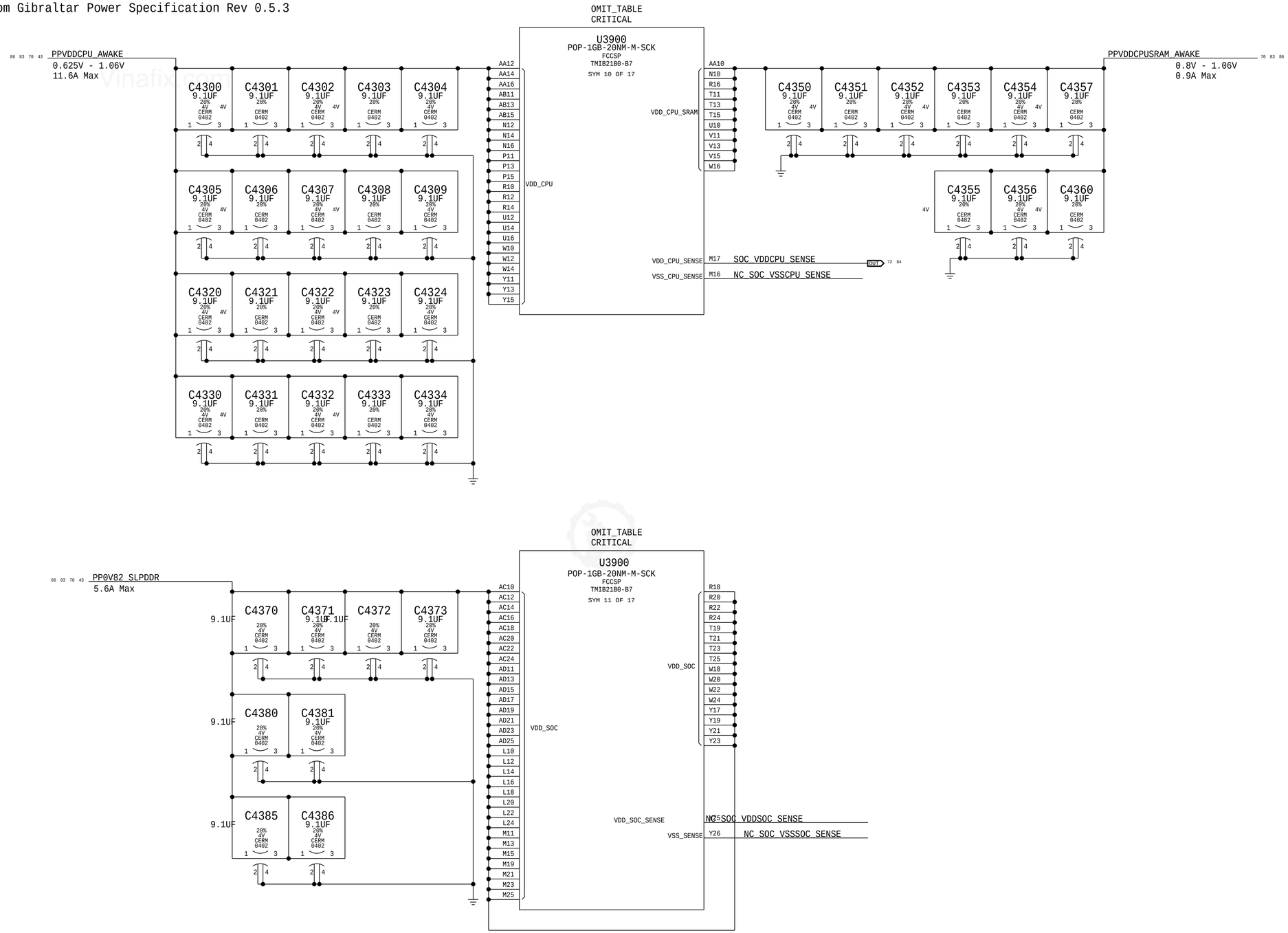

BOM_COST_GROUP=SOC

PAGE TITLE
SOC POWER 1

Apple Inc.

DRAWING NUMBER 051-04273
SIZE D
REVISION 4.0.0
BRANCH evt-1
PAGE 43 OF 500
SHEET 38 OF 98

NOTICE OF PROPRIETARY PROPERTY:
THE INFORMATION CONTAINED HEREIN IS THE PROPRIETARY PROPERTY OF APPLE INC.
THE POSESSOR AGREES TO THE FOLLOWING:
I TO MAINTAIN THIS DOCUMENT IN CONFIDENCE
II NOT TO REPRODUCE OR COPY IT
III NOT TO REVEAL OR PUBLISH IT IN WHOLE OR PART
IV ALL RIGHTS RESERVED

Current estimates @ 105C & 2GB from Gibraltar Power Specification Rev 0.5.3

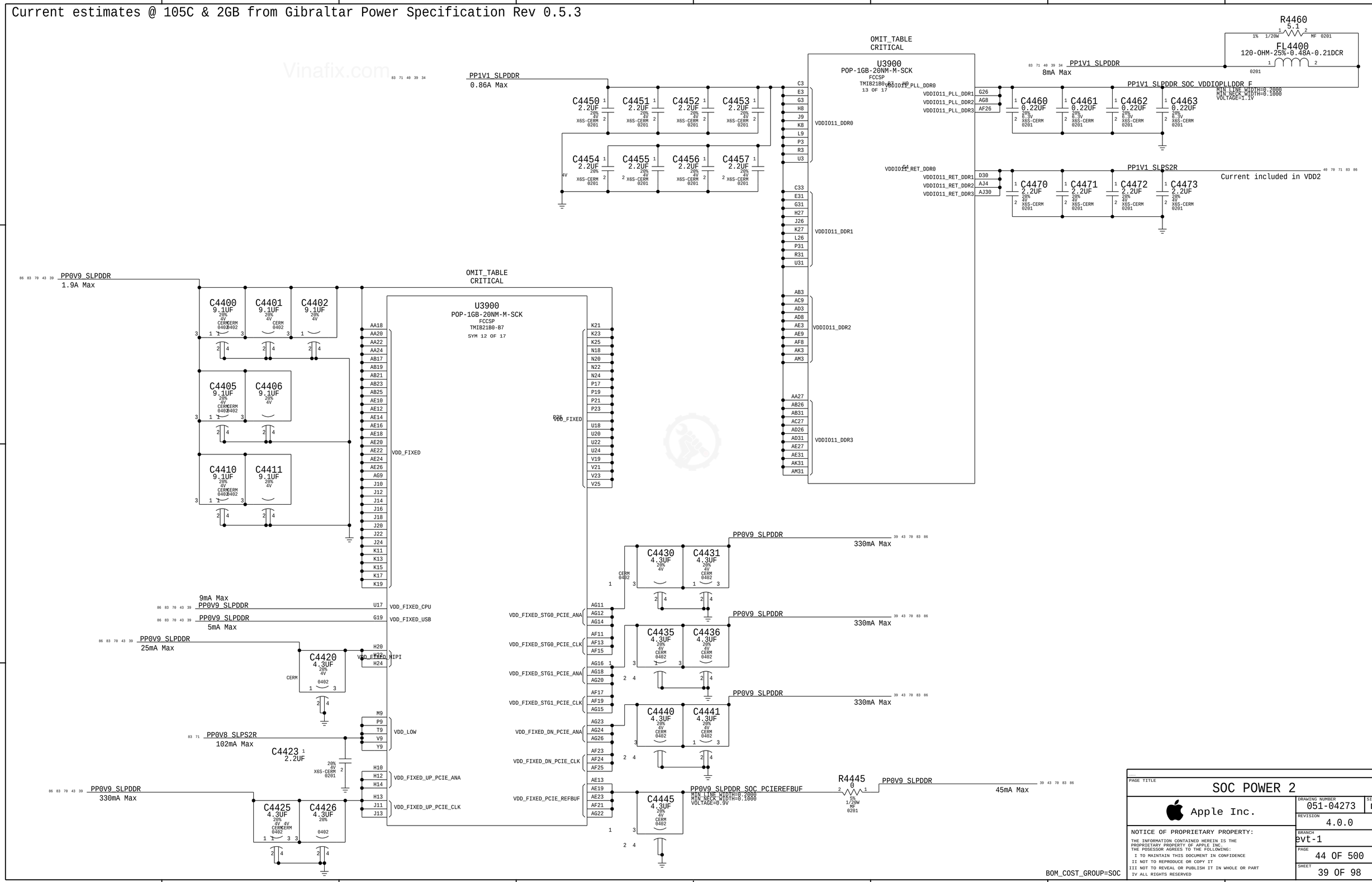

PAGE TITLE
SOC POWER 2

Apple Inc.

DRAWING NUMBER 051-04273 SIZE D
REVISION 4.0.0
BRANCH evt-1
PAGE 44 OF 500
SHEET 39 OF 98

NOTICE OF PROPRIETARY PROPERTY:
THE INFORMATION CONTAINED HEREIN IS THE PROPRIETARY PROPERTY OF APPLE INC.
THE POSESSOR AGREES TO THE FOLLOWING:
I TO MAINTAIN THIS DOCUMENT IN CONFIDENCE
II NOT TO REPRODUCE OR COPY IT
III NOT TO REVEAL OR PUBLISH IT IN WHOLE OR PART
IV ALL RIGHTS RESERVED

Current estimates @ 105C & 2GB from Gibraltar Power Specification Rev 0.5.3

Vinafix.com

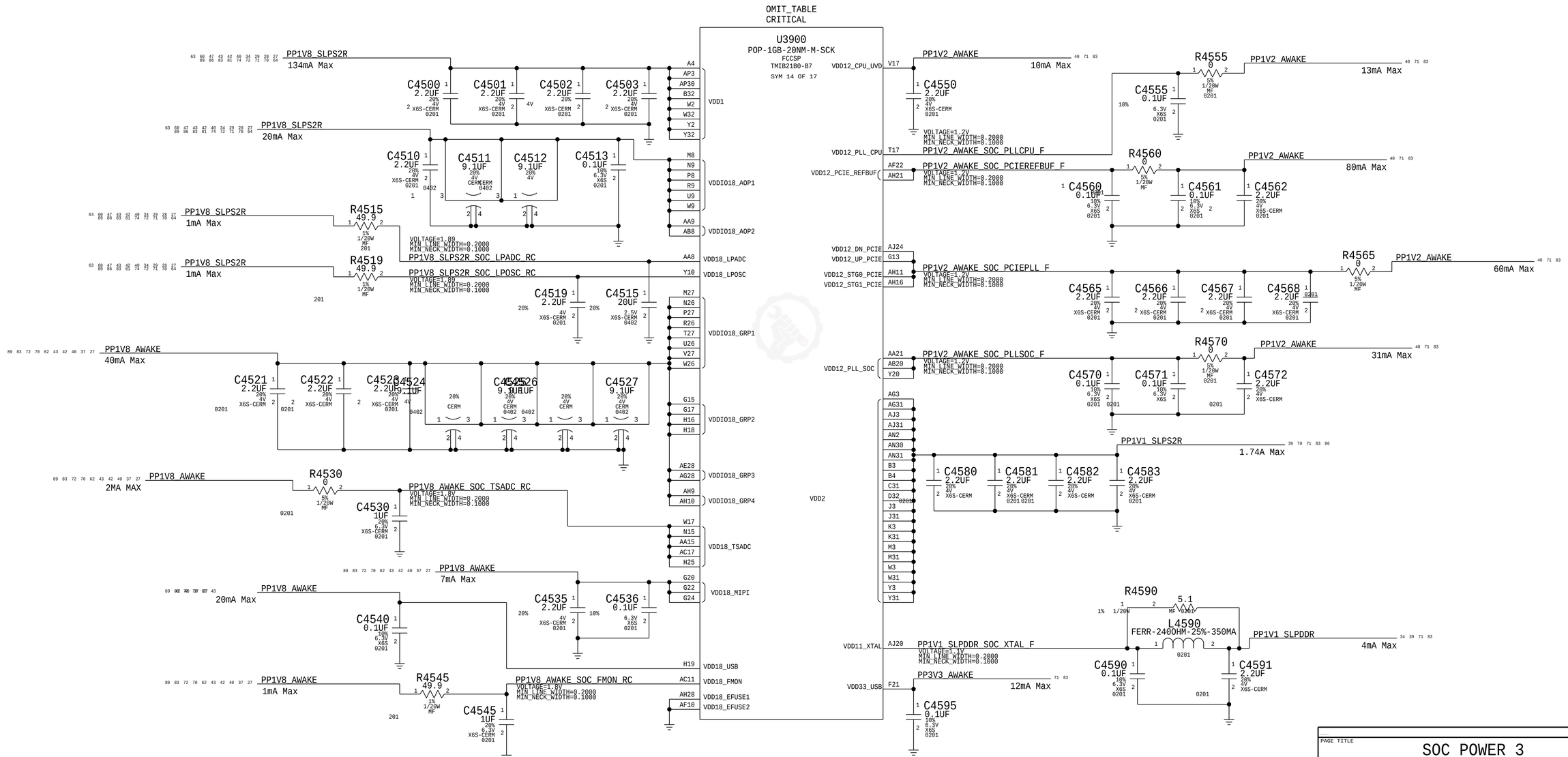

PAGE TITLE
SOC POWER 3

Apple Inc.

DRAWING NUMBER 051-04273
SIZE D
REVISION 4.0.0
BRANCH evt-1
PAGE 45 OF 500
SHEET 40 OF 98

NOTICE OF PROPRIETARY PROPERTY:
THE INFORMATION CONTAINED HEREIN IS THE PROPRIETARY PROPERTY OF APPLE INC.
THE POSESSOR AGREES TO THE FOLLOWING:
I TO MAINTAIN THIS DOCUMENT IN CONFIDENCE
II NOT TO REPRODUCE OR COPY IT
III NOT TO REVEAL OR PUBLISH IT IN WHOLE OR PART
IV ALL RIGHTS RESERVED

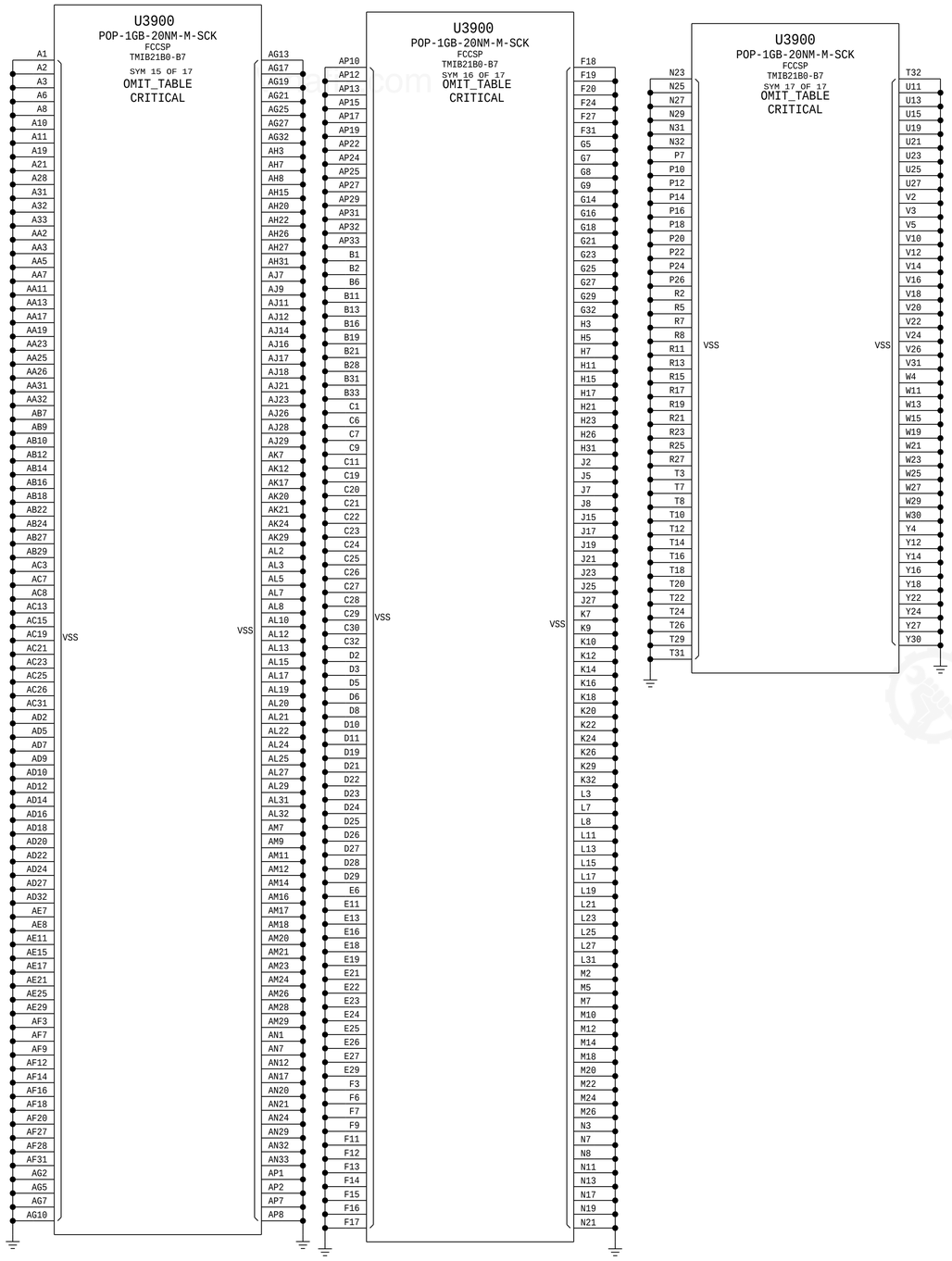

BOM_COST_GROUP=SOC

PAGE TITLE

SOC GROUND

Apple Inc.

DRAWING NUMBER 051-04273 SIZE D

REVISION 4.0.0

BRANCH evt-1

PAGE 46 OF 500

SHEET 41 OF 98

NOTICE OF PROPRIETARY PROPERTY:
THE INFORMATION CONTAINED HEREIN IS THE PROPRIETARY PROPERTY OF APPLE INC.
THE POSESSOR AGREES TO THE FOLLOWING:
I TO MAINTAIN THIS DOCUMENT IN CONFIDENCE
II NOT TO REPRODUCE OR COPY IT
III NOT TO REVEAL OR PUBLISH IT IN WHOLE OR PART
IV ALL RIGHTS RESERVED

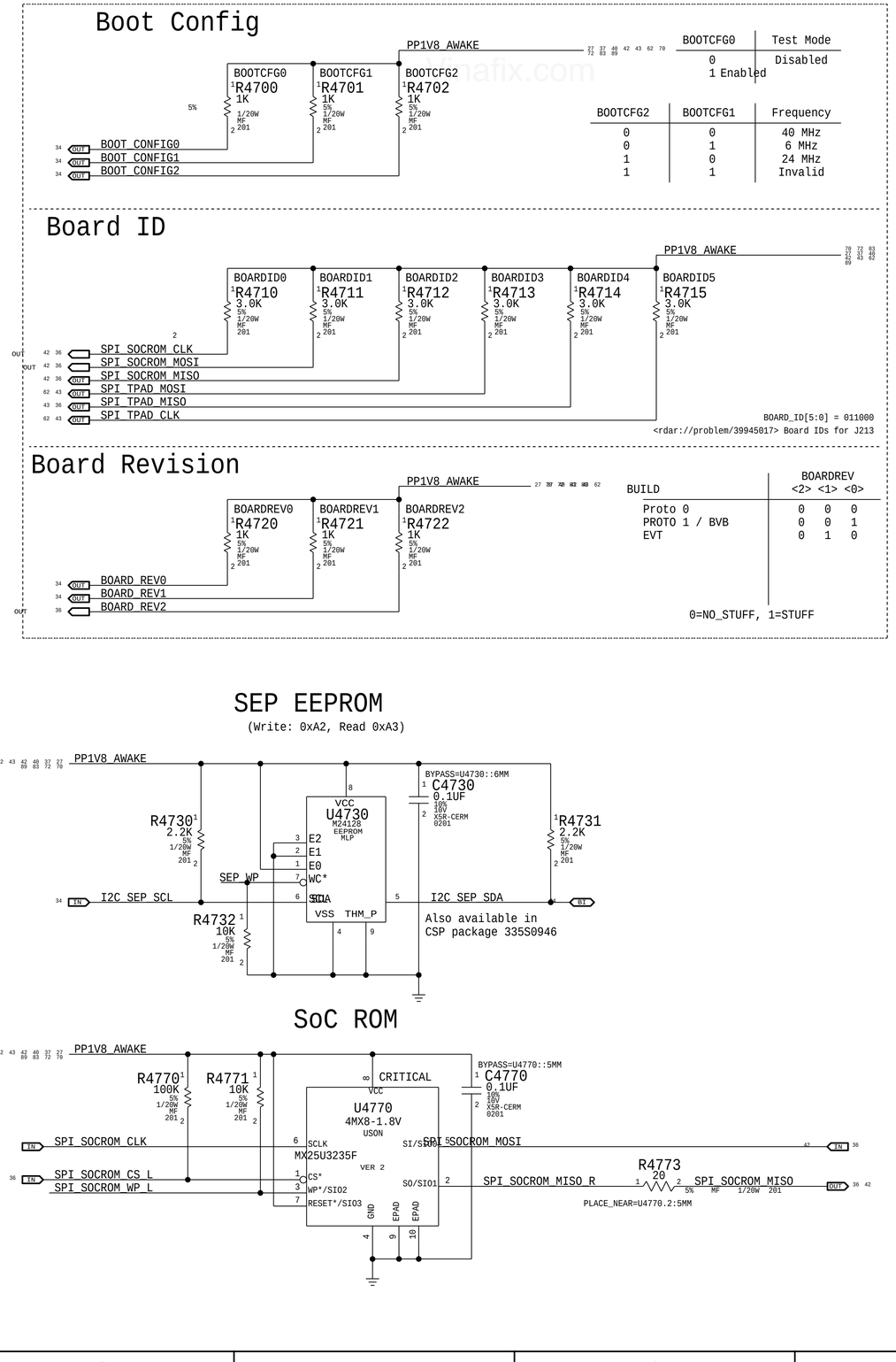

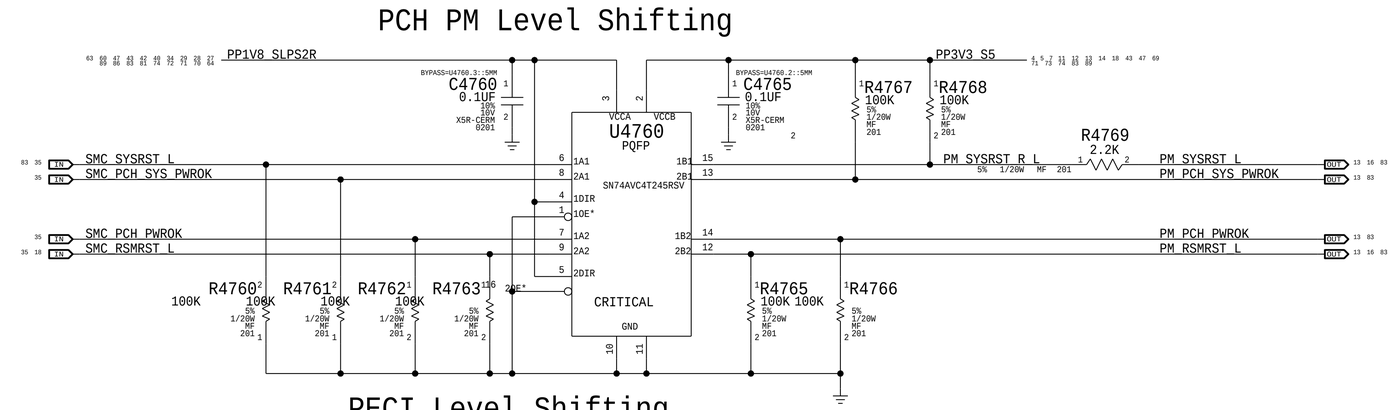

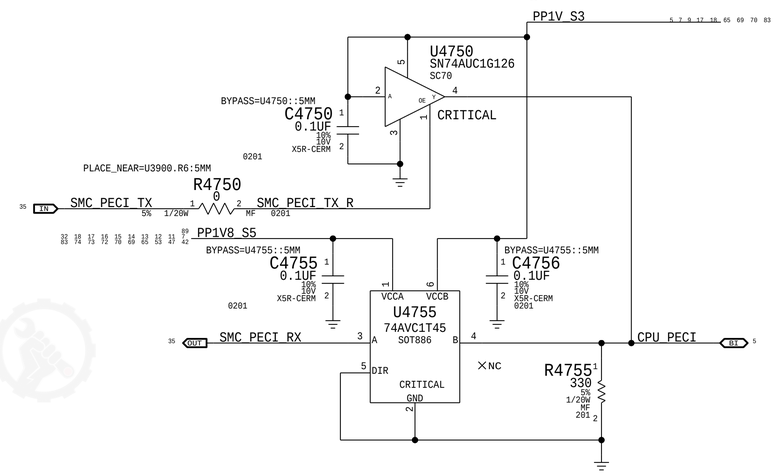

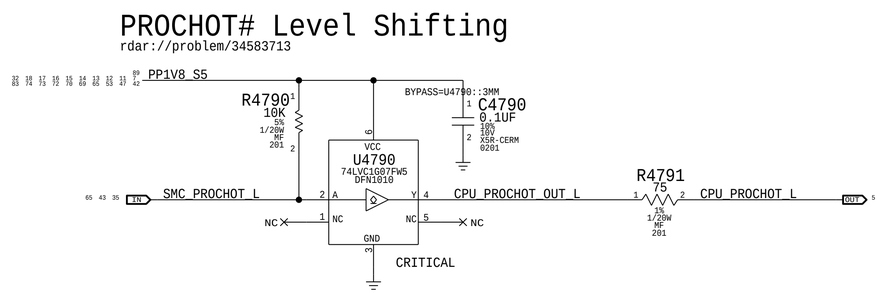

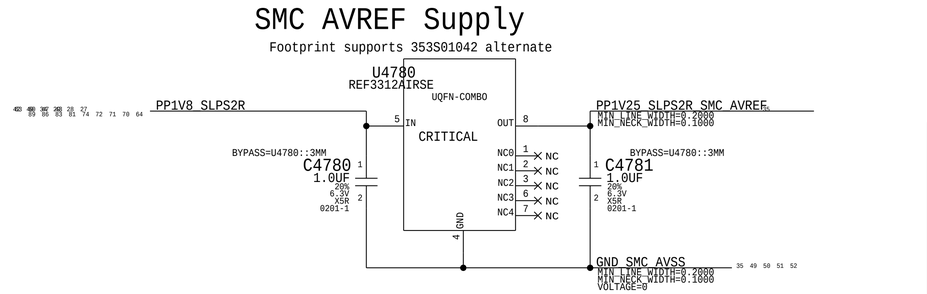

PAGE TITLE
SOC SHARED SUPPORT

Apple Inc.

DRAWING NUMBER	051-04273
SIZE	D
REVISION	4.0.0
BRANCH	evt-1
PAGE	47 OF 500
SHEET	42 OF 98

NOTICE OF PROPRIETARY PROPERTY:
THE INFORMATION CONTAINED HEREIN IS THE PROPRIETARY PROPERTY OF APPLE INC.
THE POSESSOR AGREES TO THE FOLLOWING:
I TO MAINTAIN THIS DOCUMENT IN CONFIDENCE
II NOT TO REPRODUCE OR COPY IT
III NOT TO REVEAL OR PUBLISH IT IN WHOLE OR PART
IV ALL RIGHTS RESERVED

PCIe Up R2D AC Caps

PCIE_SOC_R2D_C_P<0>	C4820 0.22UF	20% 6.3V X5R 0201	PCIE_SOC_R2D_P<0>
PCIE_SOC_R2D_C_N<0>	C4821 0.22UF	20% 6.3V X5R 0201	PCIE_SOC_R2D_N<0>
PCIE_SOC_R2D_C_P<1>	C4822 0.22UF	20% 6.3V X5R 0201	PCIE_SOC_R2D_P<1>
PCIE_SOC_R2D_C_N<1>	C4823 0.22UF	20% 6.3V X5R 0201	PCIE_SOC_R2D_N<1>
PCIE_SOC_R2D_C_P<2>	C4824 0.22UF	20% 6.3V X5R 0201	PCIE_SOC_R2D_P<2>
PCIE_SOC_R2D_C_N<2>	C4825 0.22UF	20% 6.3V X5R 0201	PCIE_SOC_R2D_N<2>
PCIE_SOC_R2D_C_P<3>	C4826 0.22UF	20% 6.3V X5R 0201	PCIE_SOC_R2D_P<3>
PCIE_SOC_R2D_C_N<3>	C4827 0.22UF	20% 6.3V X5R 0201	PCIE_SOC_R2D_N<3>

Triaxial acceleration sensor

NOSTUFF U4870 etc. per <rdar://46140415>

L4870 FERR-240OHM-25%-350MHZ 0201 NOSTUFF

VOLTAGE=1.8 MIN_LINE_WIDTH=0.2000 MIN_NECK_WIDTH=0.1000

PP1V8_G3S → PP1V8_ACCEL_FILT (PLACE_NEAR=U4870.7:2MM)

C4870 0.22UF 20% 10V 0201 NOSTUFF (PLACE_NEAR=U4870.7:2MM)

C4871 0.22UF 20% 10V 0201 NOSTUFF (PLACE_NEAR=U4870.8:2MM)

U4870 BMA282 LGA

Pin	Signal	Net
VDD		PP1V8_ACCEL_FILT
VDDIO		PP1V8_ACCEL_FILT
CS*	NOSTUFF	SPI_ACCEL_CS_L
SCX		SPI_AOP_SENSOR_CLK
SDX		SPI_AOP_SENSOR_MOSI
SDO		SPI_AOP_SENSOR_MISO_R
INT1		ACCEL_INT1
INT2		ACCEL_INT2
PS		13
GND		
GNDIO		

Lid Detect Sensors

Clamshell Closed/Open = Low/High
SMC and U6650 isolated per <rdar://45820207>

J4800 AMR-MLB-X502 SM OMIT_TABLE

LID_OPEN_LEFT → R4804 10K 5% 1/20W MF 201 → PP1V8_SLPS2R

LID_OPEN_RIGHT → R4805 10K 5% 1/20W MF 201 → SMC_LID_RIGHT

SMC_LID_LEFT → PP1V8_SLPS2R

C4802 0.1UF 10% 6.3V CERM-X5R 0201 (BYPASS=U4802::5MM)

U4802 74LVC1G32 SOT891 → IPD_LID_OPEN

GPIO Source Termination

Net	Resistor	Value	Net
I2S_SPKRAMP_L_R2D_R	R4843 (PLACE_NEAR=U3900.AC32:5MM)	20	I2S_SPKRAMP_L_R2D
I2S_SPKRAMP_L_BCLK_R	R4844 (PLACE_NEAR=U3900.Y29:5MM)	20	I2S_SPKRAMP_L_BCLK
I2S_SPKRAMP_L_LRCLK_R	R4863 (PLACE_NEAR=U3900.AE32:5MM)	20	I2S_SPKRAMP_L_LRCLK
I2S_SPKRAMP_R_R2D_R	R4845 (PLACE_NEAR=U3900.E17:5MM)	20	I2S_SPKRAMP_R_R2D
I2S_SPKRAMP_R_BCLK_R	R4846 (PLACE_NEAR=U3900.D17:5MM)	20	I2S_SPKRAMP_R_BCLK
I2S_SPKRAMP_R_LRCLK_R	R4864 (PLACE_NEAR=U3900.B18:5MM)	20	I2S_SPKRAMP_R_LRCLK
I2S_CODEC_R2D_R	R4847 (PLACE_NEAR=U3900.AA33:5MM)	20	I2S_CODEC_R2D
I2S_CODEC_BCLK_R	R4848 (PLACE_NEAR=U3900.AE33:5MM)	20	I2S_CODEC_BCLK
I2S_CODEC_LRCLK_R	R4865 (PLACE_NEAR=U3900.V29:5MM)	20	I2S_CODEC_LRCLK
SPI_TPAD_MOSI_R	R4851 (PLACE_NEAR=U3900.J30:5MM)	20	SPI_TPAD_MOSI
SPI_TPAD_CLK_R	R4852 (PLACE_NEAR=U3900.K33:5MM)	20	SPI_TPAD_CLK
SPI_TPAD_MISO_R	R4867 (PLACE_NEAR=U6860.4:2MM)	20	SPI_TPAD_MISO
SPI_MESA_MOSI_R	R4853 (PLACE_NEAR=U3900.A20:5MM)	20	SPI_MESA_MOSI
SPI_MESA_CLK_R	R4854 (PLACE_NEAR=U3900.D16:5MM)	20	SPI_MESA_CLK
SPI_DFR_MISO_R	R4866 (PLACE_NEAR=J5100.7:7MM)	20	SPI_DFR_MISO
SPI_DFR_MOSI_R	R4855 (PLACE_NEAR=U3900.C17:5MM)	20	SPI_DFR_MOSI
SPI_DFR_CLK_R	R4856 (PLACE_NEAR=U3900.C16:5MM)	20	SPI_DFR_CLK
SSD0_CLK24M_R	R4857 (PLACE_NEAR=U3900.AM6:7MM)	0	SSD0_CLK24M
PDM_DMIC_CLK0_R	R4859 (PLACE_NEAR=U3900.N6:5MM)	20	PDM_DMIC_CLK0
PDM_DMIC_CLK1_R	R4860 (PLACE_NEAR=U3900.J6:5MM)	20	PDM_DMIC_CLK1
SPI_AOP_SENSOR_MOSI_R	R4861 (PLACE_NEAR=U3900.A5:5MM)	20	SPI_AOP_SENSOR_MOSI
SPI_AOP_SENSOR_CLK_R	R4862 (PLACE_NEAR=U3900.E5:5MM)	20	SPI_AOP_SENSOR_CLK
SPI_AOP_SENSOR_MISO_R	R4869 (PLACE_NEAR=U4870.3:5MM)	20	SPI_AOP_SENSOR_MISO

Project Specific Pull-Ups

PP1V8_SLPS2R
- R4895 100K 5% 1/20W MF 201 — SSD_PMU_RESET_L

PP1V8_AWAKE
- R4883 47K — SSD0_CLKREQ0_L
- R4884 47K — SSD0_CLKREQ1_L
- R4887 47K — SSD0_CLKREQ2_L
- R4888 47K — SSD0_CLKREQ3_L

PP1V8_G3S
- R4871 100K — SPI_ACCEL_CS_L
- R4872 100K — SPI_AOP_SENSOR_CLK
- R4873 100K — SPI_AOP_SENSOR_MOSI
- R4874 100K — SPI_AOP_SENSOR_MISO
- R4875 100K — UART_WLAN_D2R
- R4876 100K — UART_WLAN_D2R_CTS_L
- R4885 100K — SSD0_PCIE_RESET_L
- R4886 47K — SSD0_CLK24M
- R4870 47K — I2S_SPKRAMP_R_D2R (PLACE_NEAR=R4857.1:1MM)

Unused SOC Signals

Net	Test
NC_PLCAM_TX_THROTTLE	NO_TEST=1
NC_GNSS_HOST_TIME	NO_TEST=1
NC_GNSS_DEV_WAKE	NO_TEST=1
NC_SOC_WLAN_DEV_WAKE	NO_TEST=1
NC_BT_ROM_BOOT_L	NO_TEST=1
NC_SOC_USB_ID	NO_TEST=1
NC_BTUARTMUX_SEL_PCH	NO_TEST=1
NC_ALTIMETER_INT	NO_TEST=1
NC_SPI_ALTIMETER_CS_L	NO_TEST=1
NC_I2C_AOP_SCL	NO_TEST=1
NC_I2C_AOP_SDA	NO_TEST=1
NC_UART_BT_D2R	NO_TEST=1
NC_UART_BT_R2D	NO_TEST=1
NC_UART_BT_D2R_CTS_L	NO_TEST=1
NC_UART_BT_R2D_RTS_L	NO_TEST=1
NC_UART_GNSS_D2R_CTS_L	NO_TEST=1
NC_UART_GNSS_R2D_RTS_L	NO_TEST=1
NC_PLCAM_PROX_INT_L	NO_TEST=1
NC_PLCAM_ROMEO_B2B_DETECT	NO_TEST=1
NC_SMC_GFX_SELF_THROTTLE	NO_TEST=1
NC_SMC_TOPBLK_SWP_L	NO_TEST=1
NC_PCIEDN_WAKE_L	NO_TEST=1
NC_ENET_LOW_PWR	NO_TEST=1
NC_SDCONN_STATE_CHANGE_L	NO_TEST=1
NC_ENET_MEDIA_SENSE	NO_TEST=1
NC_SOC_WLAN_JTAG_TMS	NO_TEST=1
NC_MESA_MENUKEY_L	NO_TEST=1
NC_SOC_WLAN_JTAG_TCK	NO_TEST=1
NC_PCC_EVENT	NO_TEST=1
NC_TPAD_VIBE_L	NO_TEST=1
NC_SPI_DESCRIPTOR_OVERRIDE_L	NO_TEST=1
NC_DISP_GCON_INT_L	NO_TEST=1
NC_PCH_GCON_INT_L	NO_TEST=1
NC_SMC_FAN_1_PWM	NO_TEST=1
NC_SMC_FAN_1_TACH	NO_TEST=1
NC_SMC_LED_ONEWIRE	NO_TEST=1
NC_SSD1_SWCLK_UART_R2D	NO_TEST=1
NC_SSD1_SWDIO_UART_D2R	NO_TEST=1
NC_I2C_SOC_5_SDA	NO_TEST=1
NC_I2C_SOC_5_SCL	NO_TEST=1
NC_DFR_TOUCH_RSVD	NO_TEST=1
NC_PCHROM_SW_EN	NO_TEST=1
NC_I2S_CODEC_MCLK	NO_TEST=1
NC_I2S_HAWKING_D2R	NO_TEST=1
NC_I2S_CODEC1_R2D_R	NO_TEST=1
NC_I2S_HAWKING_BCLK_R	NO_TEST=1
NC_I2S_HAWKING_LRCLK	NO_TEST=1
NC_I2S_CODEC1_MCLK	NO_TEST=1
NC_I2C_PLCAM_SDA	NO_TEST=1
NC_I2C_PLCAM_SCL	NO_TEST=1
NC_FTCAM_CLK12M_R	NO_TEST=1
NC_FTCAM_RESET_L	NO_TEST=1
NC_PLCAM_RX_CLK12M_R	NO_TEST=1
NC_PLCAM_RX_RESET_L	NO_TEST=1
NC_PLCAM_TX_CLK12M_R	NO_TEST=1
NC_PLCAM_TX_RESET_L	NO_TEST=1
NC_PLCAM_TX_INT	NO_TEST=1
NC_PCIE_WLAN_R2D_C_P	NO_TEST=1
NC_PCIE_WLAN_R2D_C_N	NO_TEST=1
NC_PCIE_WLAN_D2R_P	NO_TEST=1
NC_PCIE_WLAN_D2R_N	NO_TEST=1
NC_PCIE_ENET_R2D_C_P	NO_TEST=1
NC_PCIE_ENET_R2D_C_N	NO_TEST=1
NC_PCIE_ENET_D2R_P	NO_TEST=1
NC_PCIE_ENET_D2R_N	NO_TEST=1
NC_PCIE_DN2_R2D_C_P	NO_TEST=1
NC_PCIE_DN2_R2D_C_N	NO_TEST=1
NC_PCIE_DN2_D2R_P	NO_TEST=1
NC_PCIE_DN2_D2R_N	NO_TEST=1
NC_PCIE_DN3_R2D_C_P	NO_TEST=1
NC_PCIE_DN3_R2D_C_N	NO_TEST=1
NC_PCIE_DN3_D2R_P	NO_TEST=1
NC_PCIE_DN3_D2R_N	NO_TEST=1
NC_PCIE_CLK100M_WLAN_P	NO_TEST=1
NC_PCIE_CLK100M_WLAN_N	NO_TEST=1
NC_WLAN_CLKREQ_L	NO_TEST=1
NC_WLAN_PERST_L	NO_TEST=1
NC_PCIE_CLK100M_ENET_P	NO_TEST=1
NC_PCIE_CLK100M_ENET_N	NO_TEST=1
NC_ENET_RESET_L	NO_TEST=1
NC_PCIE_CLK100M_DN2_P	NO_TEST=1
NC_PCIE_CLK100M_DN2_N	NO_TEST=1
NC_PCIEDN2_CLKREQ_L	NO_TEST=1
NC_PCIEDN2_RESET_L	NO_TEST=1
NC_PCIE_CLK100M_DN3_P	NO_TEST=1
NC_PCIE_CLK100M_DN3_N	NO_TEST=1
NC_PCIEDN3_CLKREQ_L	NO_TEST=1
NC_PCIEDN3_RESET_L	NO_TEST=1
NC_PCIE_SSD1_R2D_C_P<0>	NO_TEST=1
NC_PCIE_SSD1_R2D_C_N<0>	NO_TEST=1
NC_PCIE_SSD1_D2R_P<0>	NO_TEST=1
NC_PCIE_SSD1_D2R_N<0>	NO_TEST=1
NC_PCIE_SSD1_R2D_C_P<1>	NO_TEST=1
NC_PCIE_SSD1_R2D_C_N<1>	NO_TEST=1
NC_PCIE_SSD1_D2R_P<1>	NO_TEST=1
NC_PCIE_SSD1_D2R_N<1>	NO_TEST=1
NC_PCIE_SSD1_R2D_C_P<2>	NO_TEST=1
NC_PCIE_SSD1_R2D_C_N<2>	NO_TEST=1
NC_PCIE_SSD1_D2R_P<2>	NO_TEST=1
NC_PCIE_SSD1_D2R_N<2>	NO_TEST=1
NC_PCIE_SSD1_R2D_C_P<3>	NO_TEST=1
NC_PCIE_SSD1_R2D_C_N<3>	NO_TEST=1
NC_PCIE_SSD1_D2R_P<3>	NO_TEST=1
NC_PCIE_SSD1_D2R_N<3>	NO_TEST=1
NC_PCIE_CLK100M_SSD1_01_P	NO_TEST=1
NC_PCIE_CLK100M_SSD1_01_N	NO_TEST=1
NC_SSD1_CLKREQ0_L	NO_TEST=1
NC_SSD1_CLKREQ1_L	NO_TEST=1
NC_PCIE_CLK100M_SSD1_23_P	NO_TEST=1
NC_PCIE_CLK100M_SSD1_23_N	NO_TEST=1
NC_SSD1_CLKREQ2_L	NO_TEST=1
NC_SSD1_CLKREQ3_L	NO_TEST=1
NC_SSD1_PCIE_RESET_L	NO_TEST=1
NC_SSD1_CLK24M_R	NO_TEST=1
NC_WLAN_CONTEXT_A	NO_TEST=1
NC_WLAN_CONTEXT_B	NO_TEST=1

SoC Test Points

- TP_SOC_AMUXOUT → PP4801 (SM-SP)
- TP_SOC_TST_CLKOUT → PP4802 (SM-SP)

Remote Feedback Sense (Buck 0, 2 & 5)

Net	Resistor	Net
PPVDDCPU_AWAKE (XW4820 SM, PLACE_NEAR=U3900.AA12:5MM)	R4820 0201 5% (NOSTUFF)	PVDDCPUAWAKE_FB (PLACE_NEAR=R7806.1:1MM)
PP0V82_SLPDDR (XW4821 SM, PLACE_NEAR=U3900.M25:5MM)	R4821 0201 5%	P0V8SLPDDR_FB (PLACE_NEAR=R7812.1:1MM)
PP0V9_SLPDDR (XW4822 SM, PLACE_NEAR=U3900.AE22:5MM)	R4822 0201 5%	P0V9SLPDDR_FB (PLACE_NEAR=R7816.1:1MM)

Droop Circuit

PPBUS_HS_CPU

R4802 665K 0.1% 1/20W 1K 0201

R4800 127K 1% 1/20W MF 201

PBUS_DIVIDER_REF

PBUS_DIVIDER

U4801 LMV331 SC70-5 (CRITICAL)

NOSTUFF C4805 0.1UF 10% 6.3V CERM-X5R 0201 (BYPASS=U4801::5MM)

PP3V3_S5

C4804 0.1UF 10% 6.3V CERM-X5R 0201 (BYPASS=U4801::5MM)

R4806 100K 5% 1/20W MF 201

UVP_DIS_L

PBUS_DIVIDER_OUT

U4800 SLG4AP41473 STQFN (CRITICAL)

Pin	Signal
VDD	PP3V3_S5
ENABLE	UVP_DIS_L
COMP_INPUT	PBUS_DIVIDER_OUT
DUMMY_OUTPU_COMP	NC
VREF_1V2	PBUS_DIVIDER_REF
CPU_THROTTLE*	SMC_PROCHOT_L
GPU_THROTTLE*	NC
THROTTLE*_TEST_OUTPUT	NC
GND	

C4803 0.1UF 10% 6.3V CERM-X5R 0201 (BYPASS=U4800::5MM)

HPD KSF Comp Circuit

R4830 needs to be characterized and adjusted if necessary

DP_INT_HPD → R4830 4.7K 5% 1/20W MF 201 → XDP_DP_INT_HPD

DP_INT_HPD_L

CRITICAL Q4830 SSM6N15AFEAP SOT563

CRITICAL Q4830 SSM6N15AFEAP SOT563

DP_INT_HPD_MASK

BOM_COST_GROUP=SOC

PAGE TITLE: SOC PROJECT SUPPORT

Apple Inc.

NOTICE OF PROPRIETARY PROPERTY:
THE INFORMATION CONTAINED HEREIN IS THE PROPRIETARY PROPERTY OF APPLE INC.
THE POSESSOR AGREES TO THE FOLLOWING:
I TO MAINTAIN THIS DOCUMENT IN CONFIDENCE
II NOT TO REPRODUCE OR COPY IT
III NOT TO REVEAL OR PUBLISH IT IN WHOLE OR PART
IV ALL RIGHTS RESERVED

DRAWING NUMBER	051-04273
SIZE	D
REVISION	4.0.0
BRANCH	evt-1
PAGE	48 OF 500
SHEET	43 OF 98

T151 FLEX CONNECTOR

ISOLATE FROM OTHER COMPONENTS/NETS AS MUCH AS POSSIBLE

ESD Filters

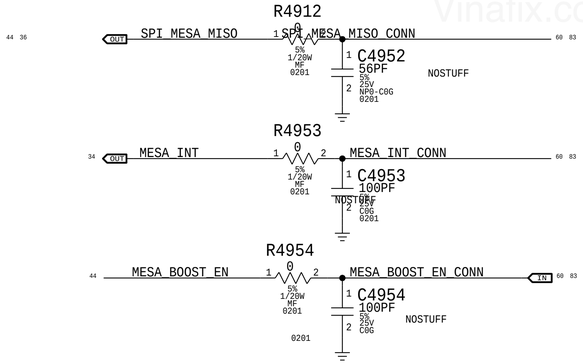

ISOLATE FROM OTHER COMPONENTS/NETS AS MUCH AS POSSIBLE

ESD Filters

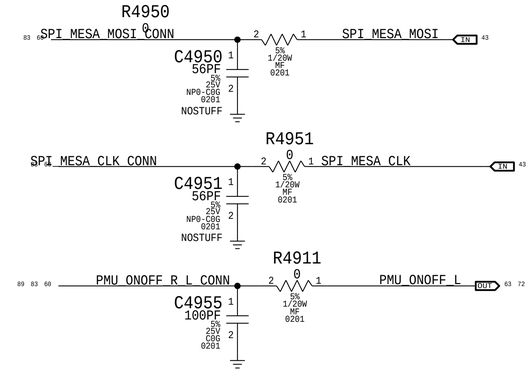

Mesa Power Sequencing Requirements

Power On: 1V8 -> 3V3 -> 16V0

MOJAVE 16V BOOST

Output Voltage	16.0V +/- 2%
Iout (max avg)	6mA
OCP (min)	13 mA
Active Discharge	15 mA sink
Max Output Cap	0.5uF @ 16V

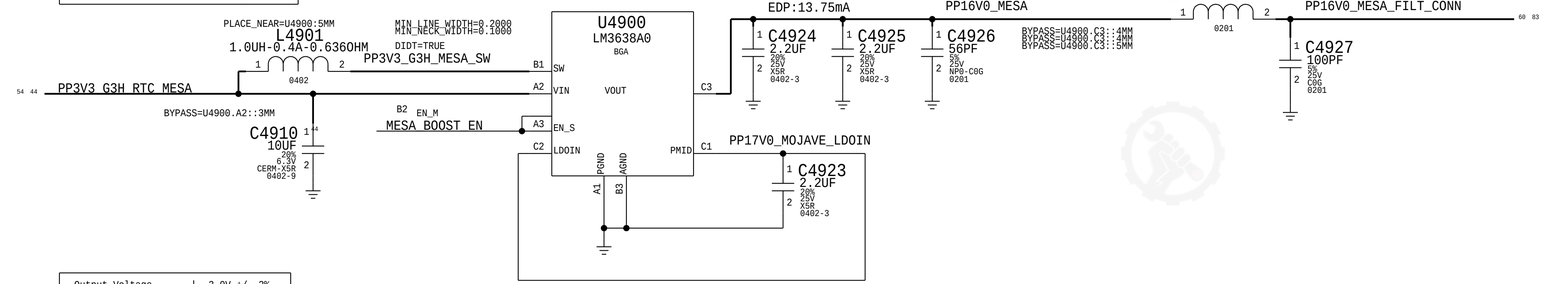

3.0V MESA

Output Voltage	3.0V +/- 2%
Iout (max avg)	250mA
Dropout Voltage	155mV
OCP (min)	250 mA
Active Discharge	280 Ohm Typ

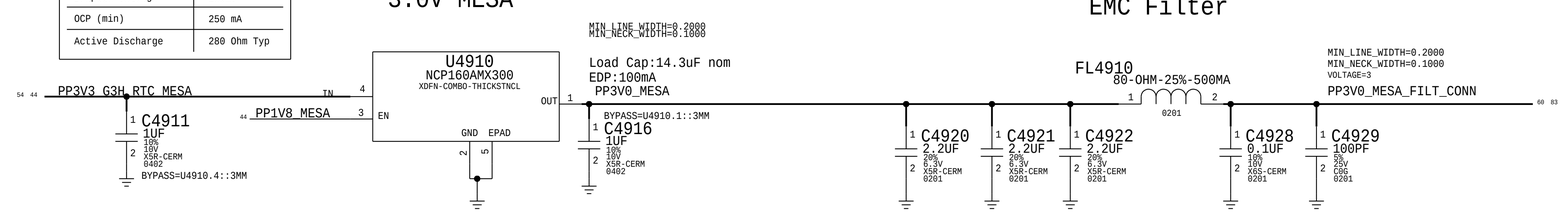

1.8V MESA

Output Voltage	1.825V +/- 2%
Iout (max avg)	250mA
Dropout Voltage	50mV Typ @ 100mA
OCP (min)	250 mA
Active Discharge	230 Ohm Typ
Max Output Cap	10uF

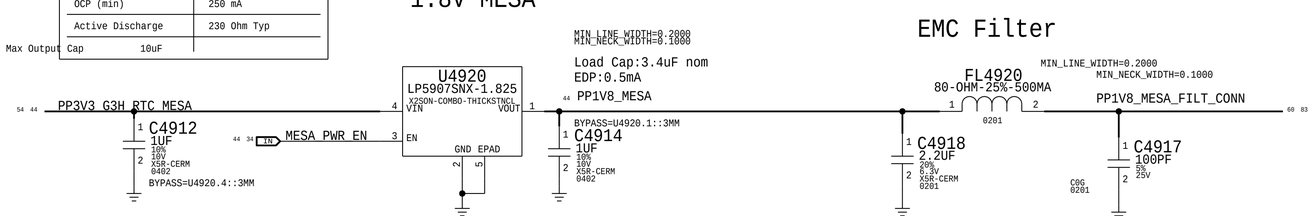

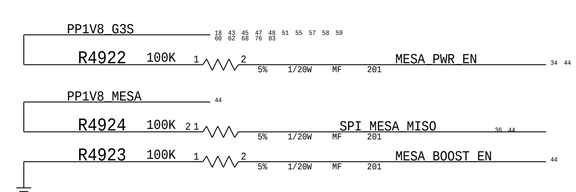

BOM_COST_GROUP=MESA

PAGE TITLE: T151

Apple Inc.

DRAWING NUMBER: 051-04273 SIZE: D

REVISION: 4.0.0

BRANCH: evt-1

PAGE: 49 OF 500

SHEET: 44 OF 98

NOTICE OF PROPRIETARY PROPERTY:
THE INFORMATION CONTAINED HEREIN IS THE PROPRIETARY PROPERTY OF APPLE INC.
THE POSESSOR AGREES TO THE FOLLOWING:
I TO MAINTAIN THIS DOCUMENT IN CONFIDENCE
II NOT TO REPRODUCE OR COPY IT
III NOT TO REVEAL OR PUBLISH IT IN WHOLE OR PART
IV ALL RIGHTS RESERVED

Vinafix.com

STOCKHOLM

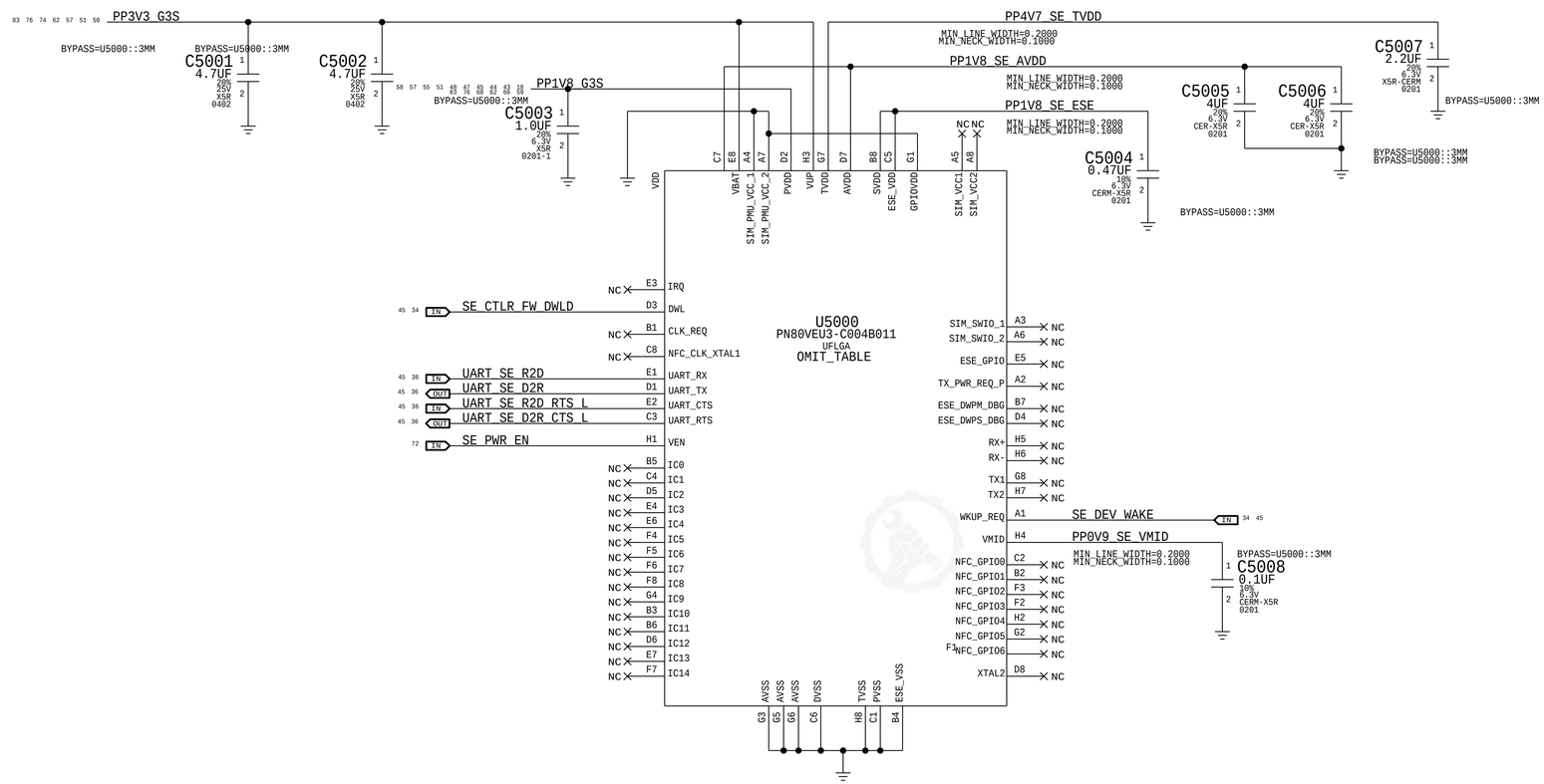

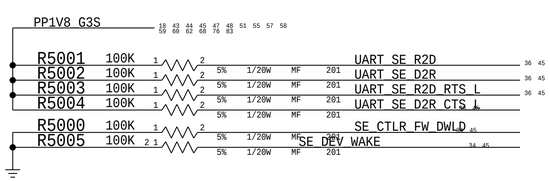

BOM_COST_GROUP=SOC

PAGE TITLE
Secure Element

Apple Inc.

DRAWING NUMBER 051-04273 SIZE D
REVISION 4.0.0
BRANCH evt-1
PAGE 50 OF 500
SHEET 45 OF 98

NOTICE OF PROPRIETARY PROPERTY:
THE INFORMATION CONTAINED HEREIN IS THE PROPRIETARY PROPERTY OF APPLE INC.
THE POSESSOR AGREES TO THE FOLLOWING:
I TO MAINTAIN THIS DOCUMENT IN CONFIDENCE
II NOT TO REPRODUCE OR COPY IT
III NOT TO REVEAL OR PUBLISH IT IN WHOLE OR PART
IV ALL RIGHTS RESERVED

T139 Support

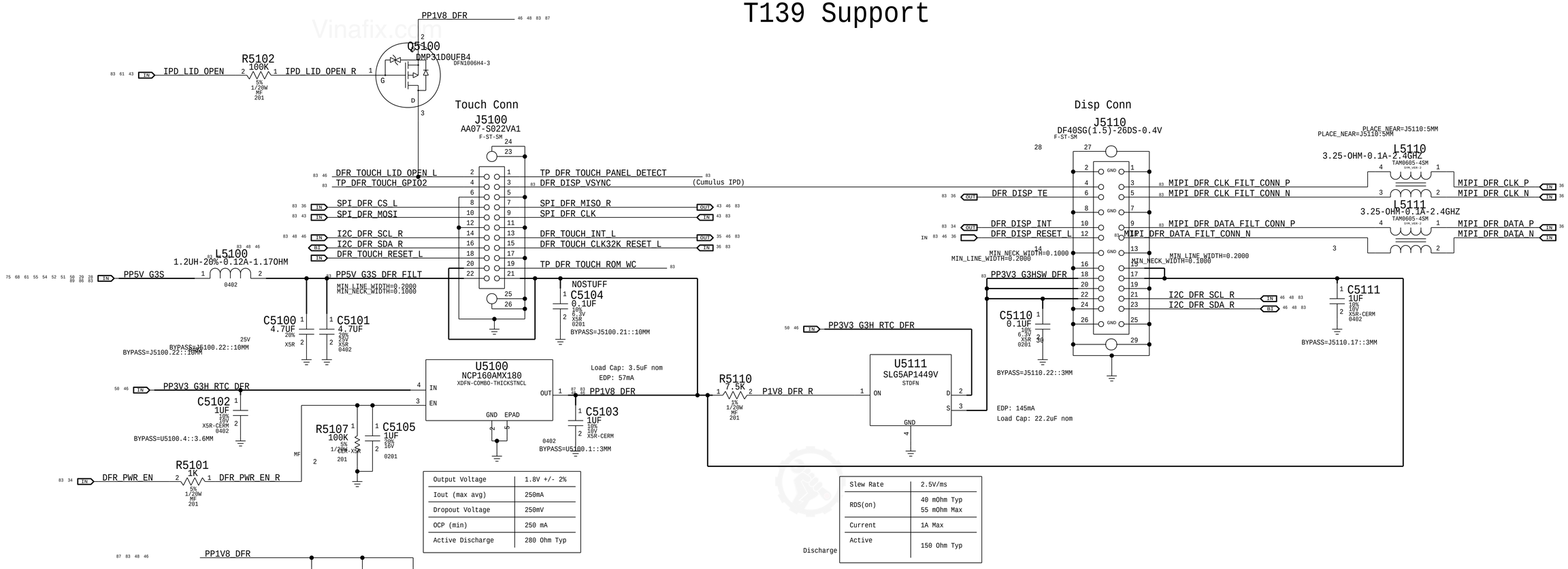

Output Voltage	1.8V +/- 2%
Iout (max avg)	250mA
Dropout Voltage	250mV
OCP (min)	250 mA
Active Discharge	280 Ohm Typ

Slew Rate	2.5V/ms
RDS(on)	40 mOhm Typ 55 mOhm Max
Current	1A Max
Discharge: Active	150 Ohm Typ

BOM_COST_GROUP=DFR

PAGE TITLE	T139 SUPPORT
Apple Inc.	
DRAWING NUMBER	051-04273
SIZE	D
REVISION	4.0.0
BRANCH	evt-1
PAGE	51 OF 500
SHEET	46 OF 98

NOTICE OF PROPRIETARY PROPERTY:
THE INFORMATION CONTAINED HEREIN IS THE PROPRIETARY PROPERTY OF APPLE INC.
THE POSESSOR AGREES TO THE FOLLOWING:
I TO MAINTAIN THIS DOCUMENT IN CONFIDENCE
II NOT TO REPRODUCE OR COPY IT
III NOT TO REVEAL OR PUBLISH IT IN WHOLE OR PART
IV ALL RIGHTS RESERVED

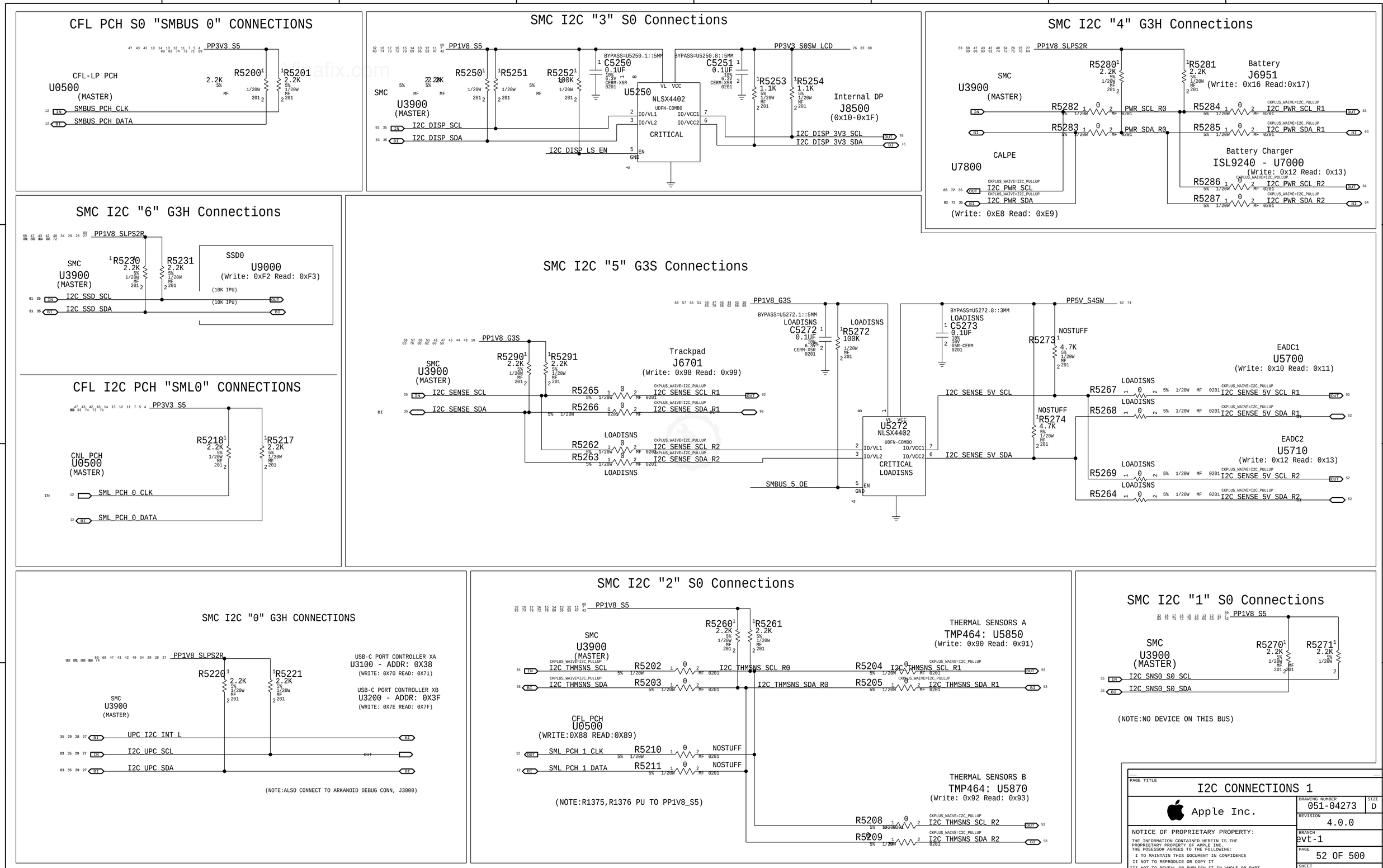
CFL PCH S0 "SMBUS 0" CONNECTIONS
PP3V3_S5
CFL-LP PCH
U0500
(MASTER)
R5200 2.2K
R5201 2.2K
SMBUS_PCH_CLK
SMBUS_PCH_DATA
SMC I2C "3" S0 Connections
PP1V8_S5
R5250 2.2K
R5251 2.2K
R5252 100K
C5250 0.1UF
BYPASS=U5250.1::5MM
C5251 0.1UF
BYPASS=U5250.8::5MM
PP3V3_S0SW_LCD
R5253 1.1K
R5254 1.1K
SMC
U3900
(MASTER)
U5250
NLSX4402
UDFN-COMBO
CRITICAL
Internal DP
J8500
(0x10-0x1F)
I2C_DISP_SCL
I2C_DISP_SDA
I2C_DISP_LS_EN
I2C_DISP_3V3_SCL
I2C_DISP_3V3_SDA
SMC I2C "4" G3H Connections
PP1V8_SLPS2R
R5280 2.2K
R5281 2.2K
Battery
J6951
(Write: 0x16 Read:0x17)
SMC
U3900
(MASTER)
R5282 0
R5283 0
PWR_SCL_R0
PWR_SDA_R0
R5284 0
R5285 0
I2C_PWR_SCL_R1
I2C_PWR_SDA_R1
CALPE
U7800
I2C_PWR_SCL
I2C_PWR_SDA
(Write: 0xE8 Read: 0xE9)
Battery Charger
ISL9240 - U7000
(Write: 0x12 Read: 0x13)
R5286 0
R5287 0
I2C_PWR_SCL_R2
I2C_PWR_SDA_R2
SMC I2C "6" G3H Connections
PP1V8_SLPS2R
R5230 2.2K
R5231 2.2K
SMC
U3900
(MASTER)
SSD0
U9000
(Write: 0xF2 Read: 0xF3)
(10K IPU)
I2C_SSD_SCL
I2C_SSD_SDA
CFL I2C PCH "SML0" CONNECTIONS
PP3V3_S5
R5218 2.2K
R5217 2.2K
CNL_PCH
U0500
(MASTER)
SML_PCH_0_CLK
SML_PCH_0_DATA
SMC I2C "5" G3S Connections
PP1V8_G3S
BYPASS=U5272.1::5MM
LOADISNS
C5272 0.1UF
R5272 100K
BYPASS=U5272.8::3MM
C5273 0.1UF
PP5V_S4SW
R5273 4.7K
NOSTUFF
R5274 4.7K
R5290 2.2K
R5291 2.2K
SMC
U3900
(MASTER)
Trackpad
J6701
(Write: 0x98 Read: 0x99)
I2C_SENSE_SCL
I2C_SENSE_SDA
R5265 0
R5266 0
I2C_SENSE_SCL_R1
I2C_SENSE_SDA_R1
R5262 0
R5263 0
I2C_SENSE_SCL_R2
I2C_SENSE_SDA_R2
U5272
NLSX4402
UDFN-COMBO
CRITICAL
LOADISNS
SMBUS_5_OE
I2C_SENSE_5V_SCL
I2C_SENSE_5V_SDA
EADC1
U5700
(Write: 0x10 Read: 0x11)
R5267 0
R5268 0
I2C_SENSE_5V_SCL_R1
I2C_SENSE_5V_SDA_R1
EADC2
U5710
(Write: 0x12 Read: 0x13)
R5269 0
R5264 0
I2C_SENSE_5V_SCL_R2
I2C_SENSE_5V_SDA_R2
SMC I2C "0" G3H CONNECTIONS
PP1V8_SLPS2R
R5220 2.2K
R5221 2.2K
SMC
U3900
(MASTER)
USB-C PORT CONTROLLER XA
U3100 - ADDR: 0X38
(WRITE: 0X70 READ: 0X71)
USB-C PORT CONTROLLER XB
U3200 - ADDR: 0X3F
(WRITE: 0X7E READ: 0X7F)
UPC_I2C_INT_L
I2C_UPC_SCL
I2C_UPC_SDA
(NOTE:ALSO CONNECT TO ARKANOID DEBUG CONN, J3000)
SMC I2C "2" S0 Connections
PP1V8_S5
R5260 2.2K
R5261 2.2K
SMC
U3900
(MASTER)
I2C_THMSNS_SCL
I2C_THMSNS_SDA
R5202 0
R5203 0
I2C_THMSNS_SCL_R0
I2C_THMSNS_SDA_R0
THERMAL SENSORS A
TMP464: U5850
(Write: 0x90 Read: 0x91)
R5204 0
R5205 0
I2C_THMSNS_SCL_R1
I2C_THMSNS_SDA_R1
CFL_PCH
U0500
(WRITE:0X88 READ:0X89)
SML_PCH_1_CLK
SML_PCH_1_DATA
R5210 0
R5211 0
NOSTUFF
(NOTE:R1375,R1376 PU TO PP1V8_S5)
THERMAL SENSORS B
TMP464: U5870
(Write: 0x92 Read: 0x93)
R5208 0
R5209 0
I2C_THMSNS_SCL_R2
I2C_THMSNS_SDA_R2
SMC I2C "1" S0 Connections
PP1V8_S5
R5270 2.2K
R5271 2.2K
SMC
U3900
(MASTER)
I2C_SNS0_S0_SCL
I2C_SNS0_S0_SDA
(NOTE:NO DEVICE ON THIS BUS)
BOM_COST_GROUP=SMC
PAGE TITLE
I2C CONNECTIONS 1
Apple Inc.
DRAWING NUMBER
051-04273
SIZE
D
REVISION
4.0.0
NOTICE OF PROPRIETARY PROPERTY:
THE INFORMATION CONTAINED HEREIN IS THE PROPRIETARY PROPERTY OF APPLE INC.
THE POSESSOR AGREES TO THE FOLLOWING:
I TO MAINTAIN THIS DOCUMENT IN CONFIDENCE
II NOT TO REPRODUCE OR COPY IT
III NOT TO REVEAL OR PUBLISH IT IN WHOLE OR PART
IV ALL RIGHTS RESERVED
BRANCH
evt-1
PAGE
52 OF 500
SHEET
47 OF 98

AP I2C "0" G3S Connections

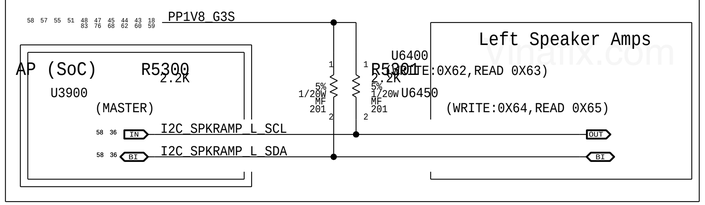

AP I2C "1" G3S Connections

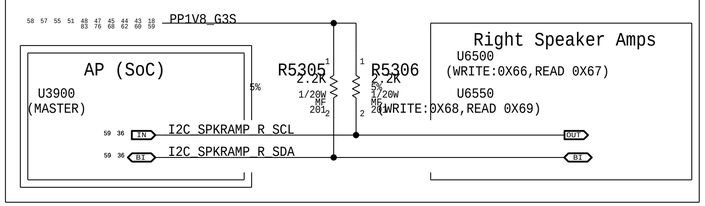

AP I2C "2" Codec Connections

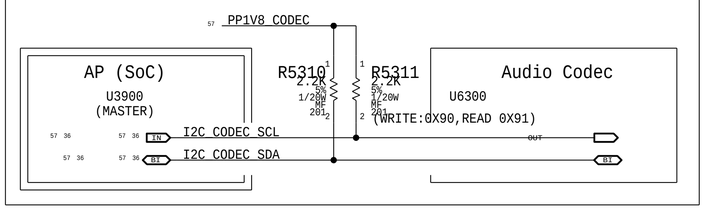

AP I2C "3" G3S Connections

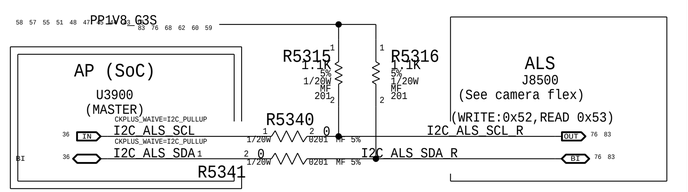

AP I2C "4" DFR Connections

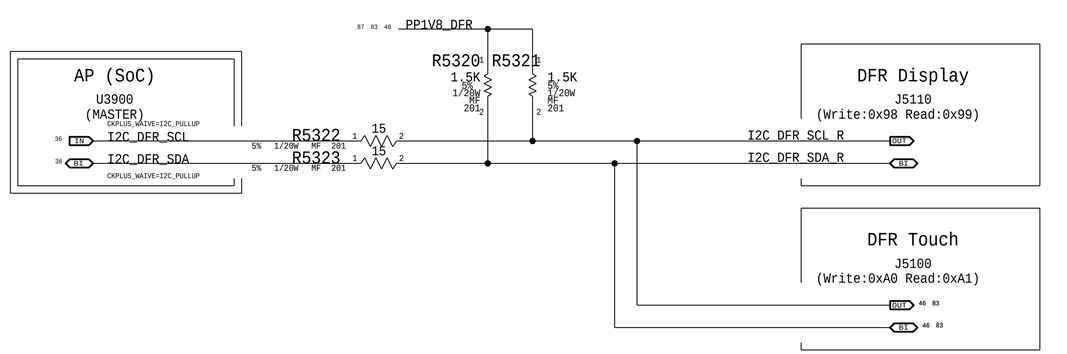

ISP I2C "0" G3S Connections

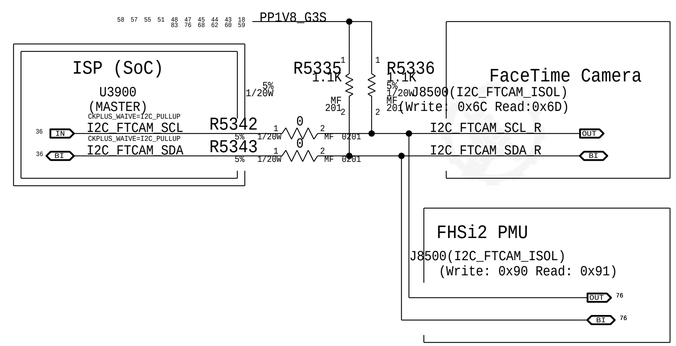

Device	SMC IF	ADDR. (8b)
ACE XA	I2C0	0X70/1
ACE XB	I2C0	0X7E/F
NC.	I2C1	
TEMP. SENSOR A	I2C2	0X90/1
TEMP. SENSOR B	I2C2	0X92/3
TCON	I2C3	0X10-1F
Charger	I2C4	0X12/3
Battery	I2C4	0X16/7
Calpe	I2C4	0XE8/9
Trackpad	I2C5	0X98/9
EADC1	I2C5	0X10/1
EADC2	I2C5	0X12/3
SSD	I2C6	0XF2/3
SOC IF (AP)		
Left Spkr Amp.(U6400)	I2C0	0X62/3
Left Spkr Amp.(U6450)	I2C0	0X64/5
Right Spkr Amp.(U6500)	I2C1	0X66/7
Right Spkr Amp.(U6550)	I2C1	0X68/9
Audio Codec	I2C2	0X90/1
ALS	I2C3	0X52/3
DFR Display	I2C4	0X98/9
DFR Touch	I2C4	0XA0/1
NC.	I2C5	
Spkr ID1	I2C6	
Spkr ID0	I2C6	
SIP IF (ISP)		
FT Camera	I2C0	0X6C/D
FHSi2	I2C0	0X90/1
NC.	I2C1	
AOP IF		
NC.	I2C0	

BOM_COST_GROUP=SMC

PAGE TITLE
I2C CONNECTIONS 2

Apple Inc.

DRAWING NUMBER 051-04273 SIZE D
REVISION 4.0.0
BRANCH evt-1
PAGE 53 OF 500
SHEET 48 OF 98

NOTICE OF PROPRIETARY PROPERTY:
THE INFORMATION CONTAINED HEREIN IS THE PROPRIETARY PROPERTY OF APPLE INC.
THE POSESSOR AGREES TO THE FOLLOWING:
I TO MAINTAIN THIS DOCUMENT IN CONFIDENCE
II NOT TO REPRODUCE OR COPY IT
III NOT TO REVEAL OR PUBLISH IT IN WHOLE OR PART
IV ALL RIGHTS RESERVED

CPU High Side Current Sense (IC0R)

Gain: 100x, EDP: 8.868 A
Rsense: 0.002 (R5400)
Vsense: 17.7 mV, Range: 12.5 A
SMC ADC: 00

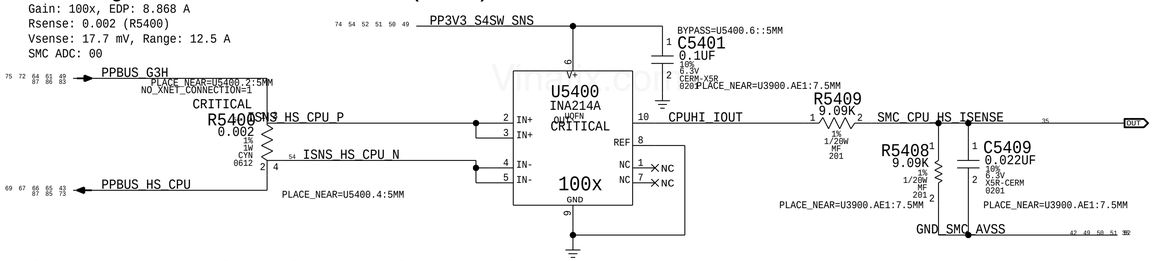

OTHER 5V High Side Current Sense (IO5R)

Gain: 100x, EDP: 5.227 A
Rsense: 0.005 (R5410) or SHORT
Vsense: 26.1 mV, Range: 6.0 A
MUX: A1

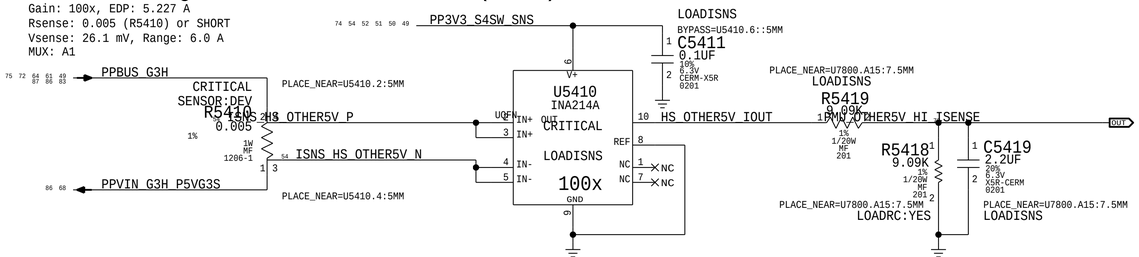

OTHER 3.3V High Side Current Sense (IO3R)

Gain: 100x, EDP: 6.736 A
Rsense: 0.003 (R5440) or SHORT
Vsense: 20.2 mV, Range: 10 A
MUX: A0

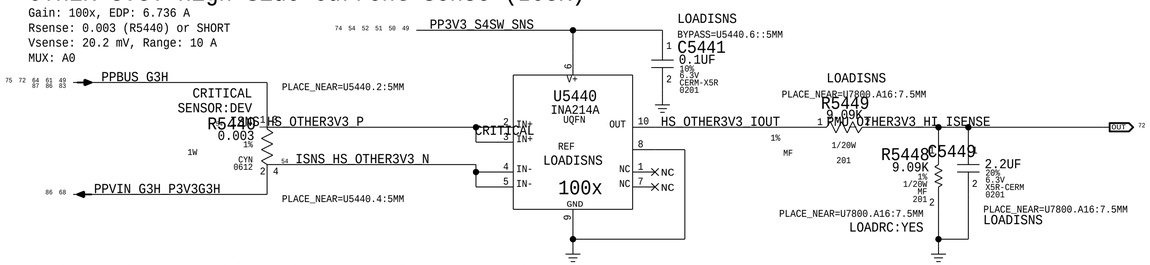

3.3V RTC High Side Current Sense (IR3R)

Gain: 100x, EDP: 2.413 A
Rsense: 0.01 (R5420) or SHORT
Vsense: 24.1 mV, Range: 3.3 A
EADC1: CH4

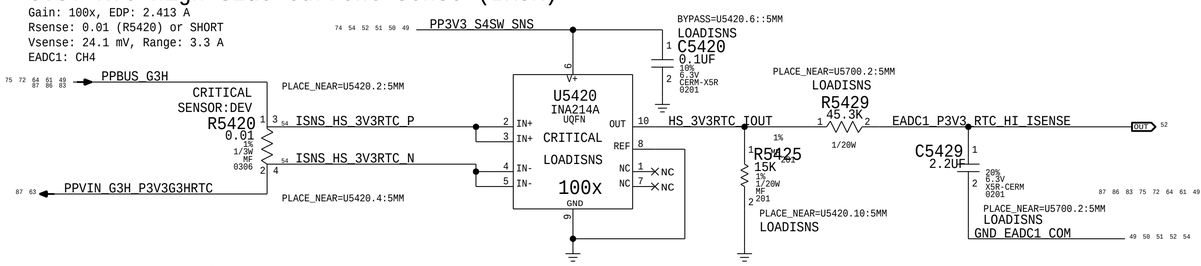

NAND Current Sense (IHNR)

Gain: 100x, EDP: 1.471 A
Rsense: 0.02 (R5460) or SHORT
Vsense: 29.4 mV, Range: 1.5 A
MUX: A6

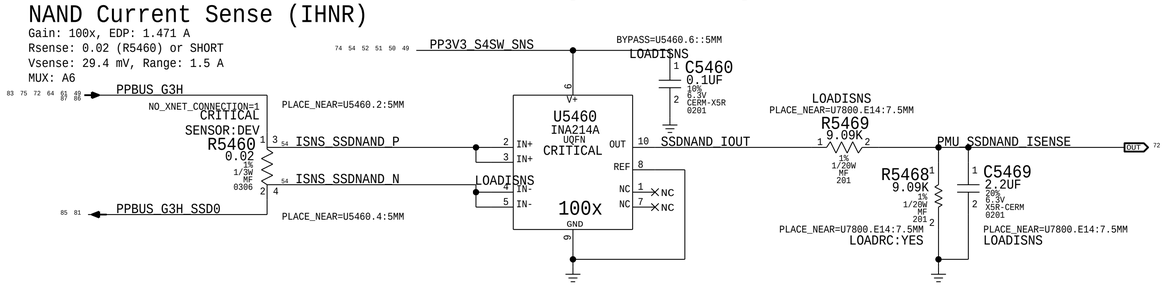

PART NUMBER	QTY	DESCRIPTION	REFERENCE DES	CRITICAL	BOM OPTION
117S0008	3	RES,MTL FLIM,100K,1/16W,0201,SMD,LF	R5418,R5448,R5478		LOADRC:NO

LCD Backlight Current Sense (IBLR)

Gain: 100x. EDP: 0.902 A
Rsense: 0.025 (R8400)
Vsense: 22.6 mV, Range: 1.32 A
EADC1: CH0

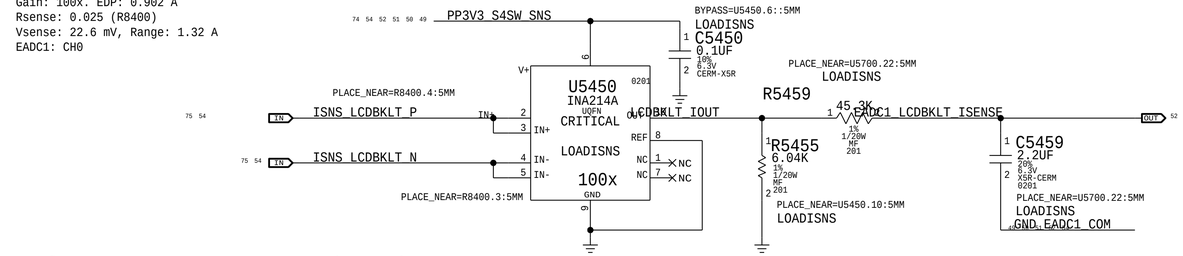

Left AMP Current Sense (IALR)

Gain: 200x, EDP: 2.6 A
Rsense: 0.005 (R54A0) or SHORT
Vsense: 13 mV, Range: 3.3 A
EADC1: CH1

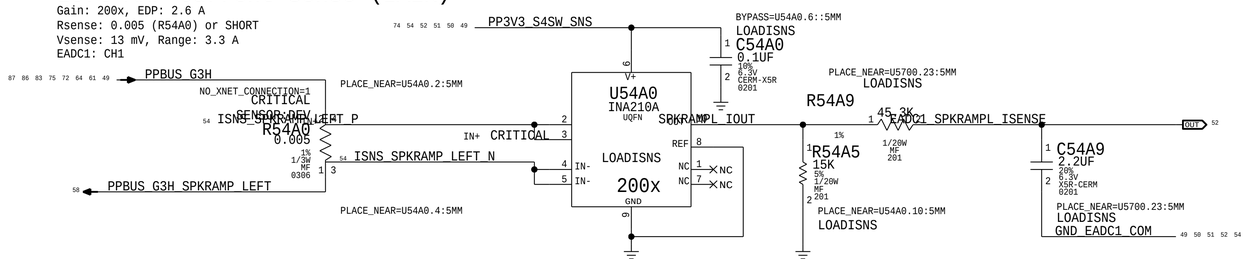

Right AMP Current Sense (IARR)

Gain: 200x, EDP: 2.6 A
Rsense: 0.005 (R54B0) or SHORT
Vsense: 13 mV, Range: 3.3 A
EADC2: CH6

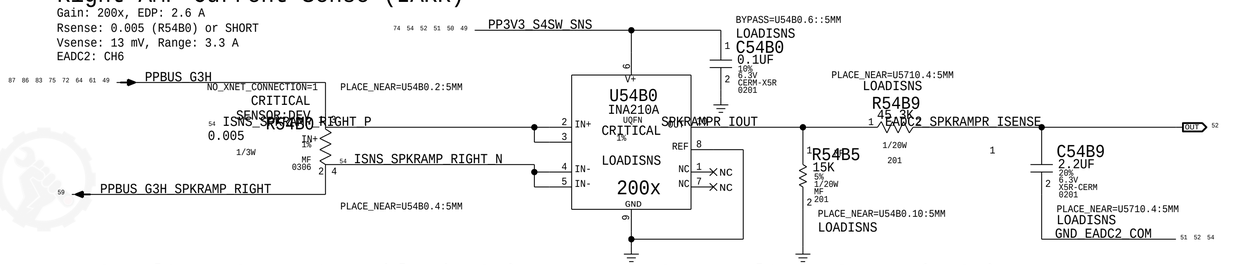

PBUS Voltage Sense & Enable (VP0R)

GAIN: 0.089X
VNOMINAL: 12.6 V, RANGE: 14.05 V
SMC ADC: 01

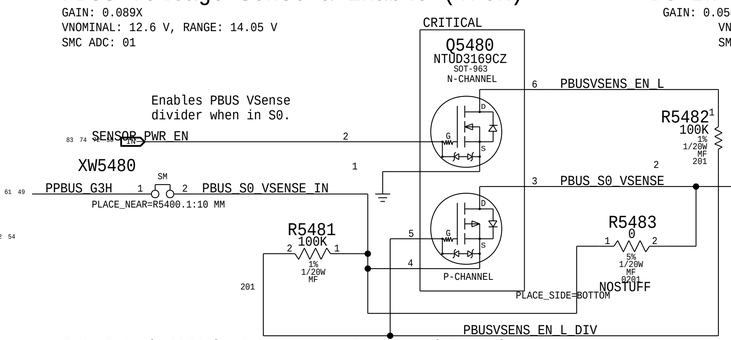

DC In Voltage Sense (VD0R)

GAIN: 0.058X
VNOMINAL: 16.5 V, RANGE: 21.45 V
SMC ADC: 04

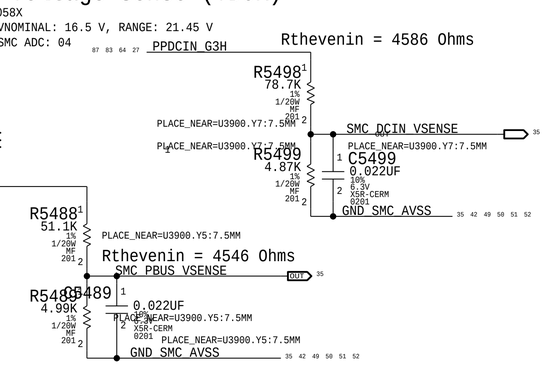

DC-IN (AMON) Current Sense (ID0R)

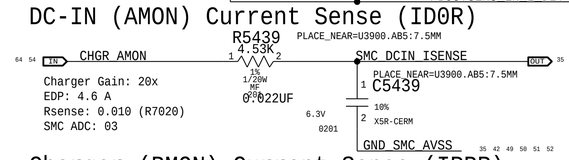

Charger Gain: 20x
EDP: 4.6 A
Rsense: 0.010 (R7020)
SMC ADC: 03

Charger (BMON) Current Sense (IPBR)

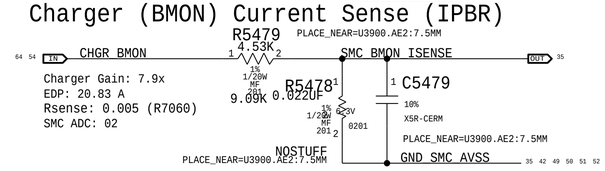

Charger Gain: 7.9x
EDP: 20.83 A
Rsense: 0.005 (R7060)
SMC ADC: 02

BOM_COST_GROUP=SENSORS

PAGE TITLE
POWER SENSORS HIGH SIDE

Apple Inc.

DRAWING NUMBER 051-04273 SIZE D
REVISION 4.0.0
BRANCH evt-1
PAGE 54 OF 500
SHEET 49 OF 98

NOTICE OF PROPRIETARY PROPERTY:
THE INFORMATION CONTAINED HEREIN IS THE PROPRIETARY PROPERTY OF APPLE INC.
THE POSESSOR AGREES TO THE FOLLOWING:
I TO MAINTAIN THIS DOCUMENT IN CONFIDENCE
II NOT TO REPRODUCE OR COPY IT
III NOT TO REVEAL OR PUBLISH IT IN WHOLE OR PART
IV ALL RIGHTS RESERVED

CPU VCCIO Current Sense (IC1C)

Gain: 200x, EDP: 3.6 A
Rsense: 0.003 (R8102) or SHORT
Vsense: 10.8 mV, Range: 5 A
PMU AMUX: A3

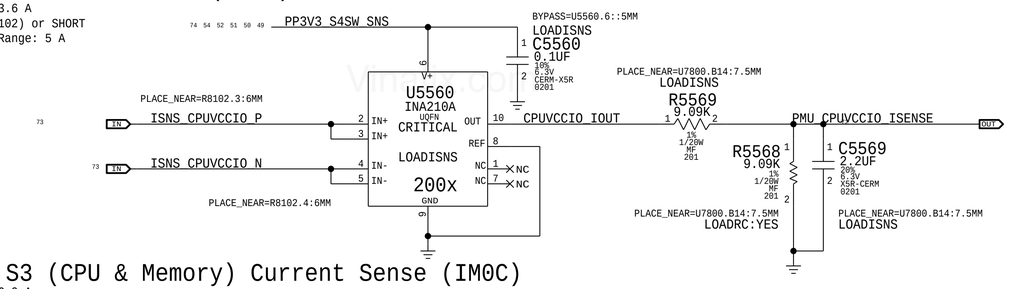

DDR 1.2V S3 (CPU & Memory) Current Sense (IM0C)

Gain: 200x, EDP: 6.9 A
Rsense: 0.002 (R8118) or SHORT
Vsense: 13.8 mV, Range: 7.5 A
PMU AMUX: A4

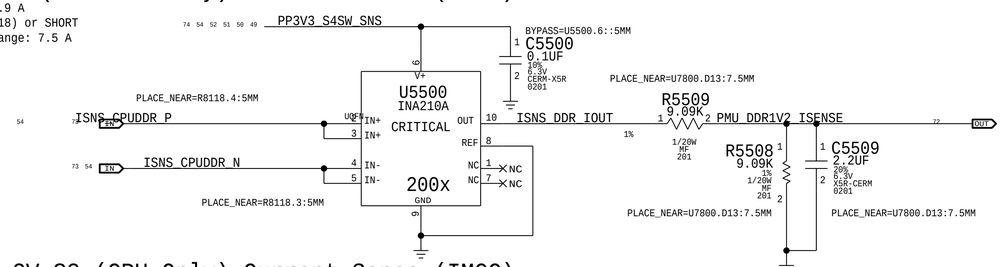

CPU DDR 1.2V S3 (CPU Only) Current Sense (IMCC)

Gain: 200x, EDP: 2.6 A
Rsense: 0.005 (R5510) or SHORT
Vsense: 13 mV, Range: 3 A
PMU AMUX: B2

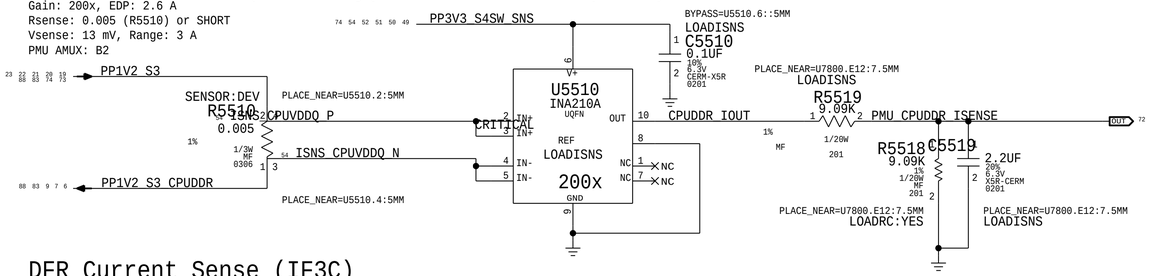

DFR Current Sense (IF3C)

Gain: 100x, EDP: 0.75 A
Rsense: 0.025 (R5520) or SHORT
Vsense: 18.8 mV, Range: 1.32 A
EADC1: CH3

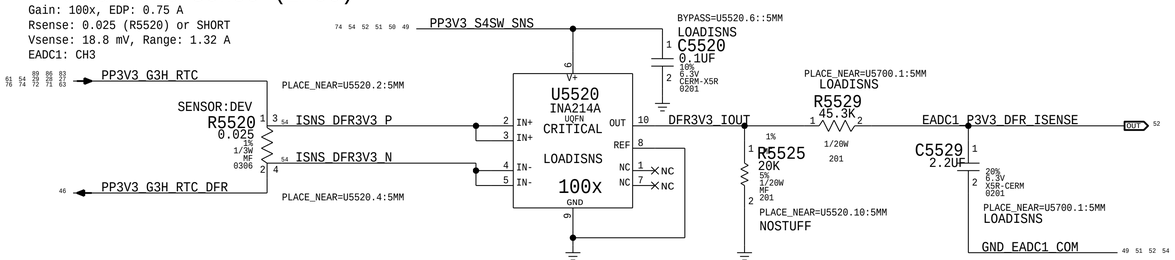

WLANBT 3.3V Current Sense (IW3C)

Gain: 163.3x, EDP: 1.698 A
Rsense: 0.003 (R5530) or Rsense SHORT
VSENSE: 5.09 MV, RANGE: 2.55 A
SMC ADC: 05

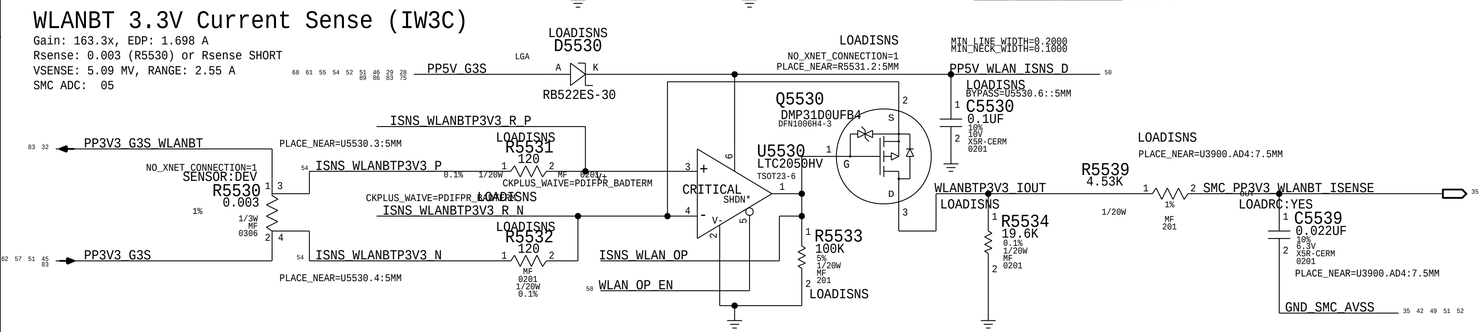

PART NUMBER	QTY	DESCRIPTION	REFERENCE DES	CRITICAL	BOM OPTION
117S0008	4	RES,MTL FLIM,100K,1/16W,0201,SMD,R	R5518,R5568,R554A,C5539		LOADRC:NO

CPU Core Current Sense (ICAC)

Gain: 104.38x, EDP: 64 A
Rsense: 2x of 0.00075 (R7310, R7320), Rsum: 0.000375
Vsense: 24 MV, Range: 76.64 A
PMU AMUX: B7

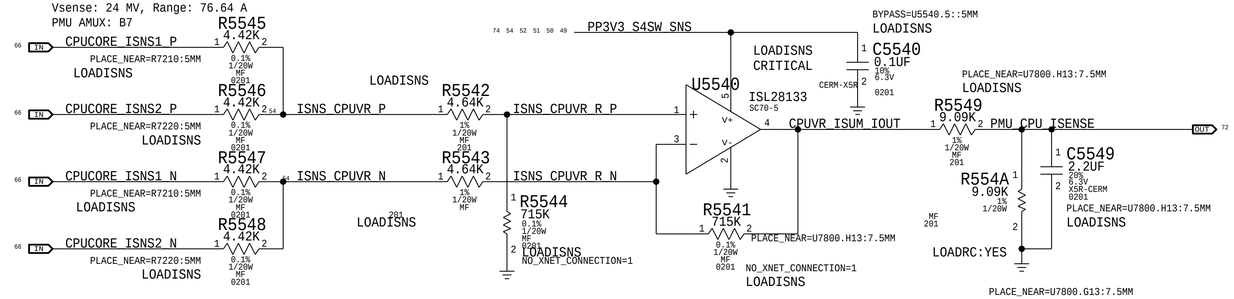

CPU Core Voltage Sense (VCAC)

PMU AMUX: B4

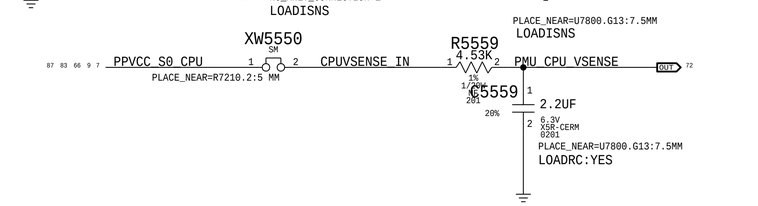

CPU GT+GTX Current Sense (ICGC)

Gain: 104.38x, EDP: 64 A
Rsense: 2x of 0.00075 (R7410, R7420), Rsum: 0.000375
Vsense: 24 mV, Range: 76.64 A
PMU AMUX: B6

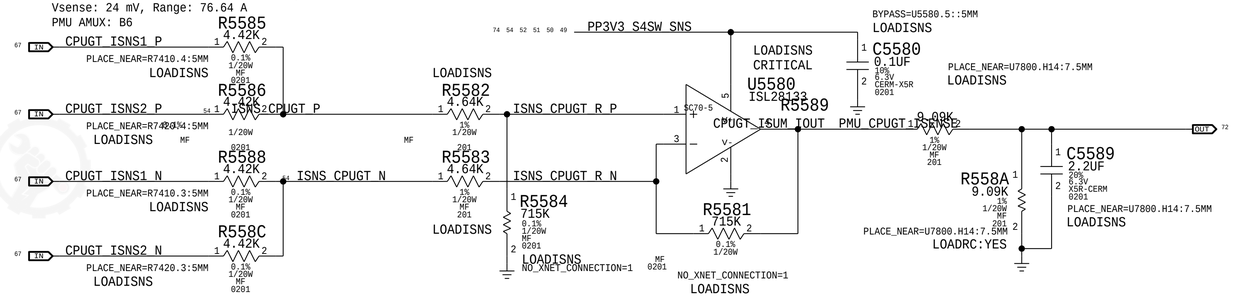

CPU GT Voltage Sense (VCGC)

PMU AMUX: B5

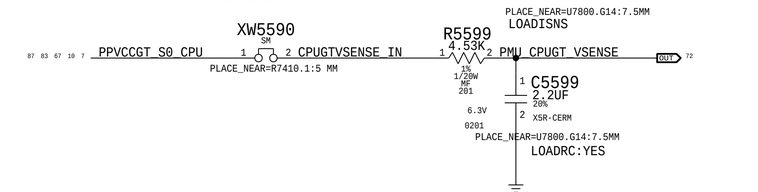

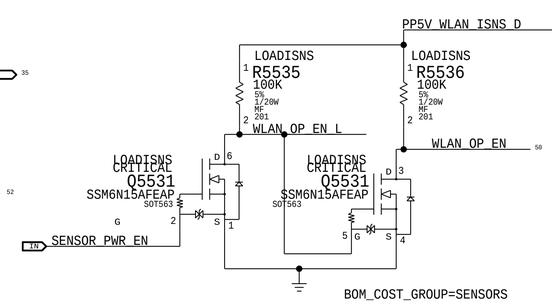

PAGE TITLE: POWER SENSORS LOAD SIDE

Apple Inc.

NOTICE OF PROPRIETARY PROPERTY:
THE INFORMATION CONTAINED HEREIN IS THE PROPRIETARY PROPERTY OF APPLE INC.
THE POSESSOR AGREES TO THE FOLLOWING:
I TO MAINTAIN THIS DOCUMENT IN CONFIDENCE
II NOT TO REPRODUCE OR COPY IT
III NOT TO REVEAL OR PUBLISH IT IN WHOLE OR PART
IV ALL RIGHTS RESERVED

DRAWING NUMBER: 051-04273
SIZE: D
REVISION: 4.0.0
BRANCH: evt-1
PAGE: 55 OF 500
SHEET: 50 OF 98

Thunderbolt TBD Left Current Sense (IULC)

Gain: 200x. EDP: 0.7 A
Rsense: 0.025 (R5640) or SHORT
Vsense: 17.5 mV, Range: 0.66 A
EADC1: CH7

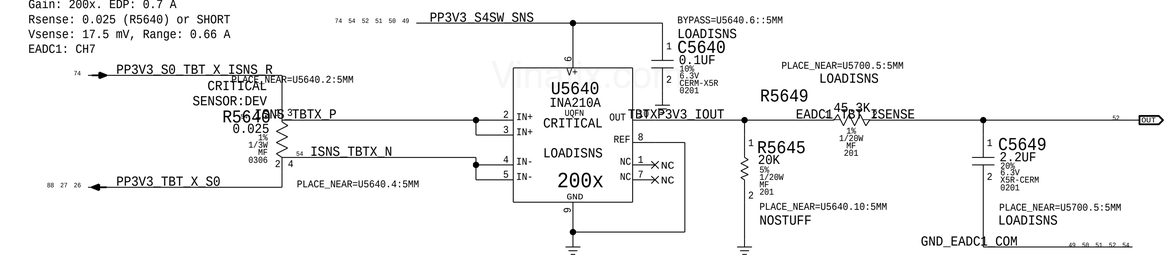

CPU Reg. ALSCAM, LCD 5V Current Sense (IC5C)

Gain: 200x. EDP: 0.42+0.1+0.1 A
Rsense: 0.025 (R5660) or SHORT
Vsense: 15.5 mV, Range: 0.60 A
PMU AMUX: A7

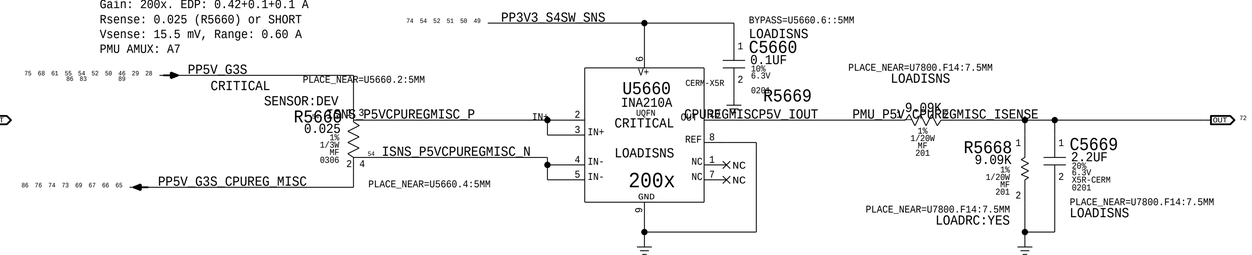

LCD Panel 3.3V Current Sense (ILDC)

Gain: 200x. EDP: 1 A
RSENSE: 0.01 (R8520) or SHORT
Vsense: 10 mV, Range: 1.5 A
EADC2: CH0

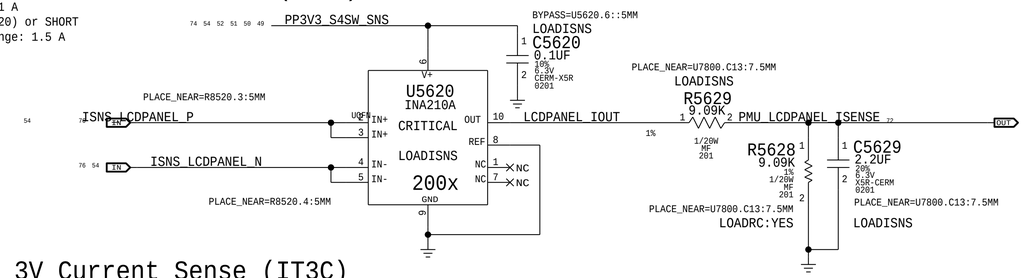

LPDDR 1.8V Current Sense (IM1C)

Gain: 200x. EDP: 0.45 A
Rsense: 0.005 (R5630) or SHORT
Vsense: 2.25 mV, Range: 3.3 A
EADC2: CH1

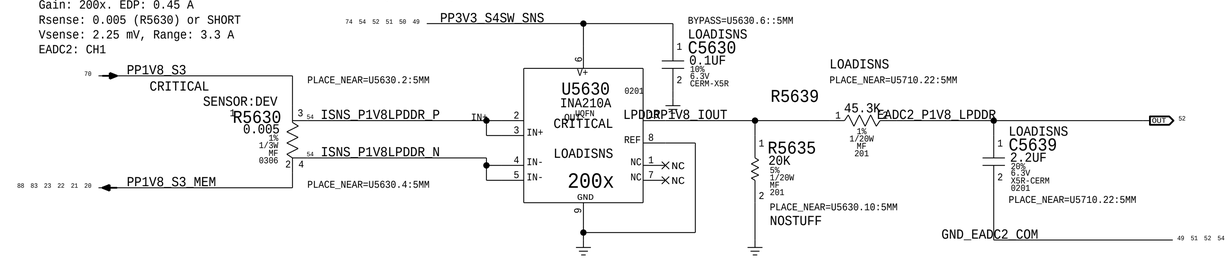

Trackpad 3V Current Sense (IT3C)

Gain: 200x, EDP: 0.05 A
Rsense: 0.1 (R5650) or SHORT
Vsense: 5 mV, Range: 0.17 A
EADC2: CH1

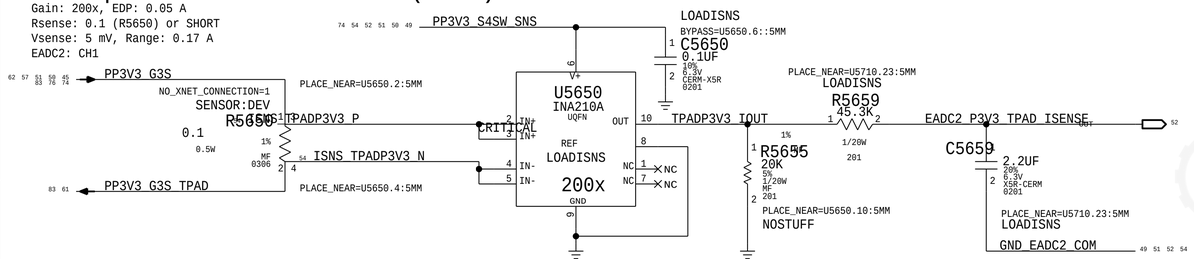

1.8V Standby Current Sense

Gain: None. EDP: 0.65 A
Rsense: 0.025 (R56B0) or SHORT
Vsense: 16.25 mV

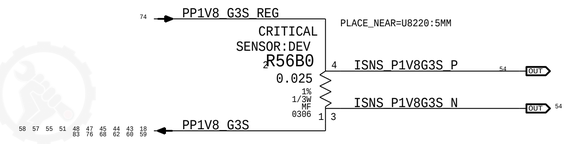

WLANBT 1.8V Current Sense (IW2C)

Gain: 200x, EDP: 0.0085 A
Rsense: 1 (R5680)
Vsense: 8.5 mV, Range: 0.013 A
SMC ADC: 06

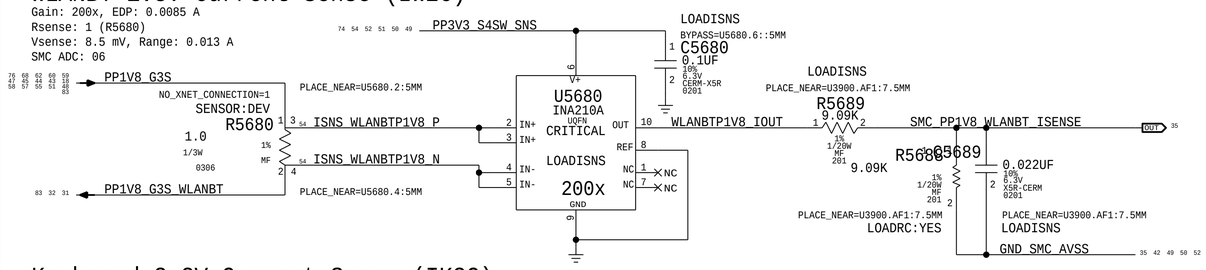

Keyboard 3.3V Current Sense (IK3C)

Gain: 200x, EDP: 0.043 A
Rsense: 0.1 (R5690)
Vsense: 4.3 mV, Range: 0.17 A
EADC1 CH6

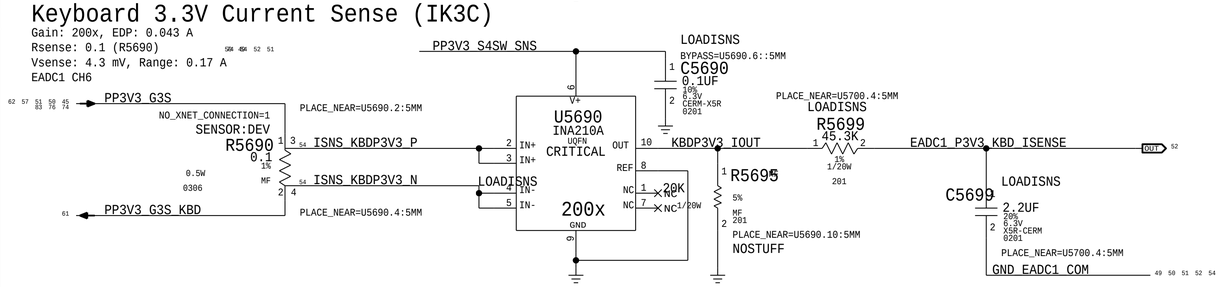

UNUSED ADC CHANNELS

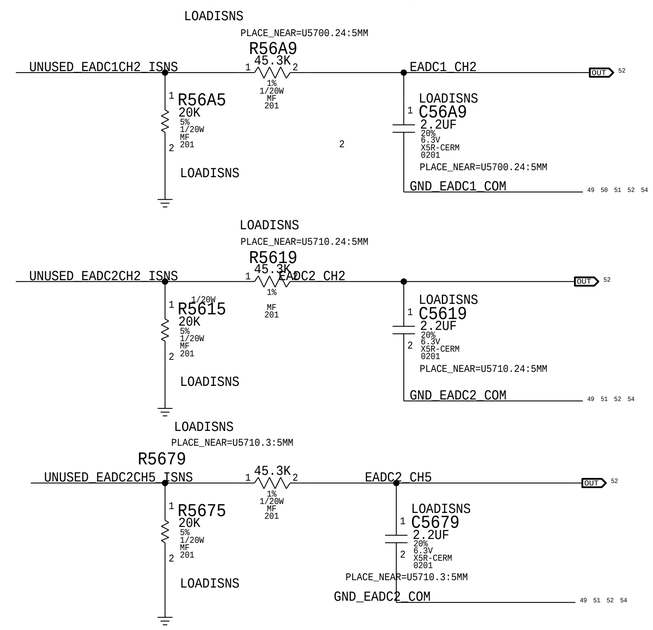

PART NUMBER	QTY	DESCRIPTION	REFERENCE DES	CRITICAL	BOM OPTION
117S0008	2	RES,MTL FLIM,100K,1/16W,0201,SMD,LF	R5628,R5688		LOADRC:NO

BOM_COST_GROUP=SENSORS

PAGE TITLE: POWER SENSORS EXTENDED

Apple Inc.

DRAWING NUMBER: 051-04273 SIZE: D
REVISION: 4.0.0
BRANCH: evt-1
PAGE: 56 OF 500
SHEET: 51 OF 98

NOTICE OF PROPRIETARY PROPERTY:
THE INFORMATION CONTAINED HEREIN IS THE PROPRIETARY PROPERTY OF APPLE INC.
THE POSESSOR AGREES TO THE FOLLOWING:
I TO MAINTAIN THIS DOCUMENT IN CONFIDENCE
II NOT TO REPRODUCE OR COPY IT
III NOT TO REVEAL OR PUBLISH IT IN WHOLE OR PART
IV ALL RIGHTS RESERVED

Calpe 3.3V Input Current Left (IP3C)

Gain: 100x. EDP: 10.224 A
Rsense: 0.002 (R5780)
Vsense: 20.448 mV, Range: 12.5 A
EADC1: CH7

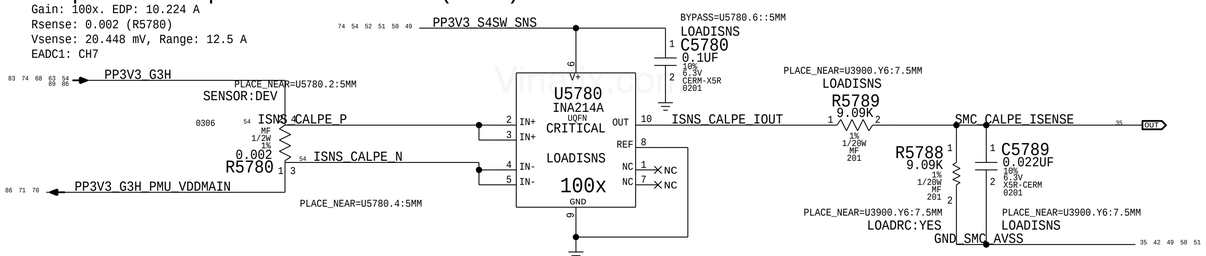

KB backlite Current Sense (IKBC)

Gain: 200x, EDP: 0.17 A
Rsense: 0.05 (R5730)
Vsense: 8.5 mV, Range: 0.33 A
EADC2: CH3

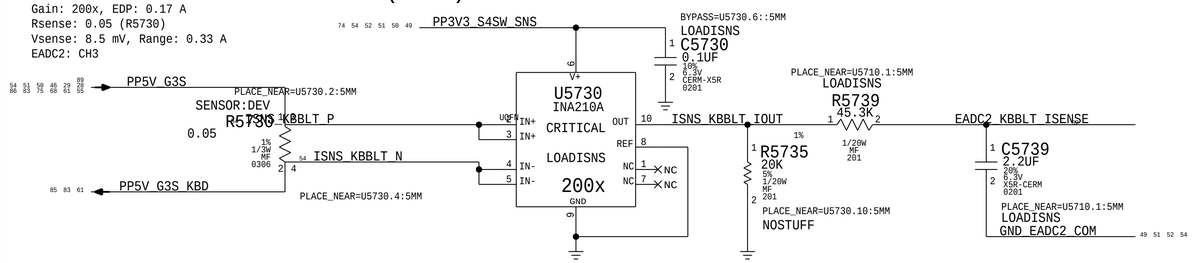

CPU SA Current Sense (ICSC)

Gain: 100X, EDP: 9.5 A
Rsense: 0.002 (R7270)
Vsense: 19 mV, Range: 15 A
PMU AMUX: B1

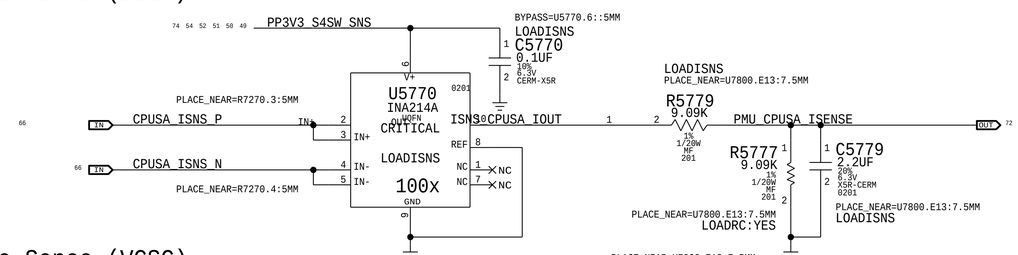

CPU SA Voltage Sense (VCSC)

PMU AMUX: B3

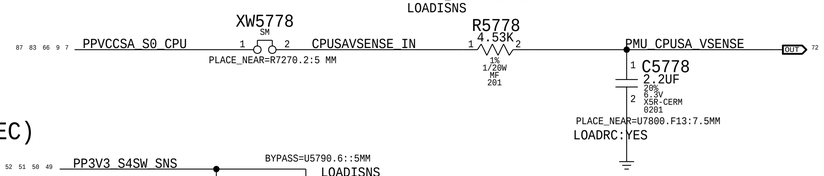

CPU EDRAM Current Sense (ICEC)

Gain: 200x, EDP: 6.2 A
Rsense: 0.002 (R7702) or SHORT
Vsense: 12.4 mV, Range: 7.5 A
PMU AMUX: A2

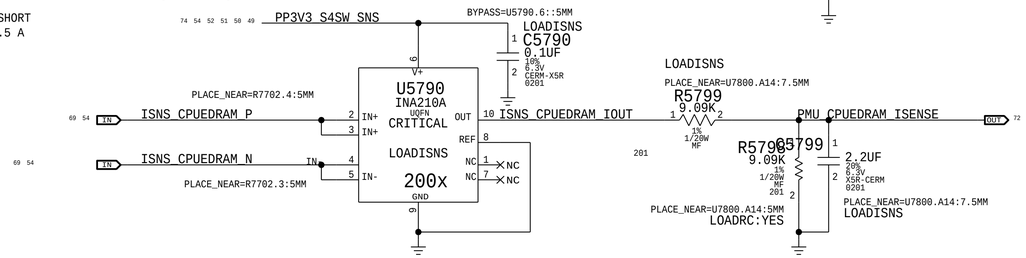

EADC1

(Write: 0x10 Read: 0x11)

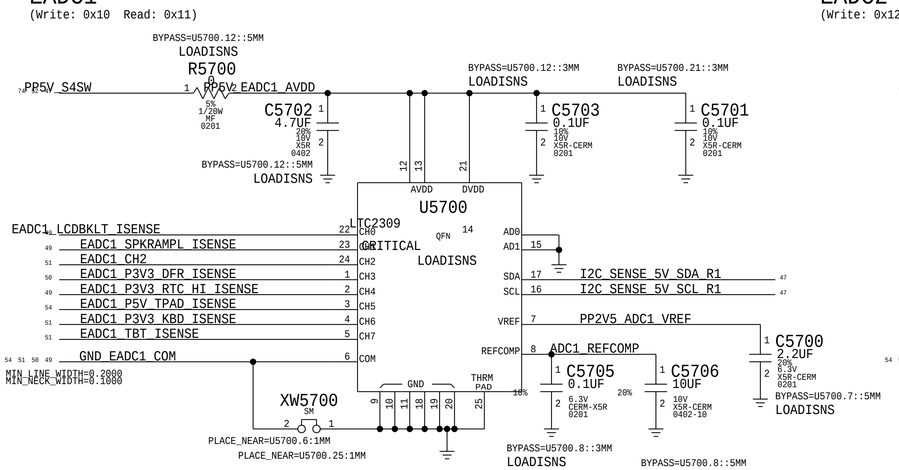

EADC2

(Write: 0x12 Read: 0x13)

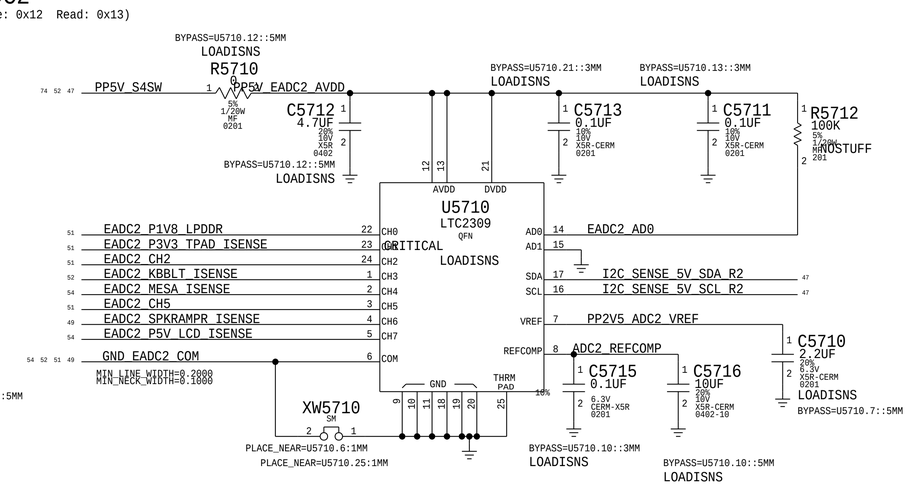

PART NUMBER	QTY	DESCRIPTION	REFERENCE DES	CRITICAL	BOM OPTION
117S0008	2	RES,MTL FLIM,100K,1/16W,0201,SMD,LF	R5768,R5777,R5788,R5798,C5778		LOADRC:NO

BOM_COST_GROUP=SENSORS

PAGE TITLE: POWER SENSORS EXTENDED 2

Apple Inc.

DRAWING NUMBER: 051-04273 SIZE: D
REVISION: 4.0.0
BRANCH: evt-1
PAGE: 57 OF 500
SHEET: 52 OF 98

NOTICE OF PROPRIETARY PROPERTY:
THE INFORMATION CONTAINED HEREIN IS THE PROPRIETARY PROPERTY OF APPLE INC.
THE POSESSOR AGREES TO THE FOLLOWING:
I TO MAINTAIN THIS DOCUMENT IN CONFIDENCE
II NOT TO REPRODUCE OR COPY IT
III NOT TO REVEAL OR PUBLISH IT IN WHOLE OR PART
IV ALL RIGHTS RESERVED

Thermal Sensor A:
TBT Die, NAND, WIFI, I/O proximity

I2C Write: 0x90, I2C Read: 0x91

TBT Die Thermal Diode (TBA)

Placement Note:
The P leg connects to THERMDA of TBT die.
The N leg connectd to GND pin close to THERMDA.

WIFI Proximity (TW0P)

Placement Note:
BOTTOM side of WIFI/BT module

NAND Proximity #1 (TH0b)

Placement note:
BOTTOM side between NAND devices

NAND Proximity #2 (TH0a)

Placement note:
TOP side between NAND devices

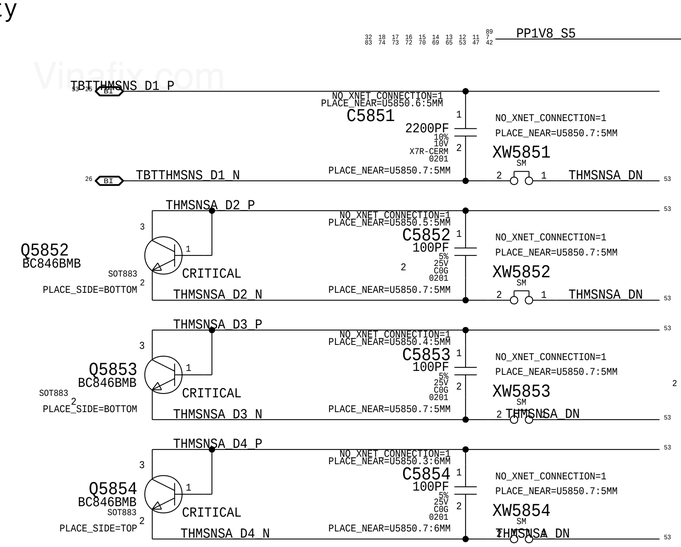

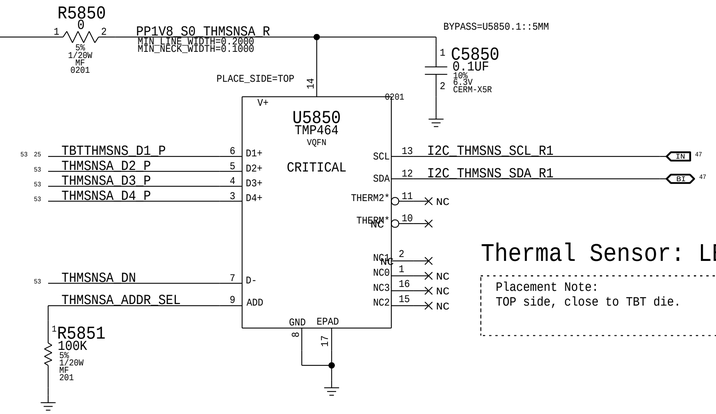

Thermal Sensor: LEFT IO proximity (TI0p)

Placement Note:
TOP side, close to TBT die.

Thermal Sensor B
Fin Stack, CPU Proximity, Memory Proximity, and CPU VR

I2C Write: 0x92, I2C Read: 0x93

Thermal Diode: Ambient (TA0p)

Placement Note:
Airflow thermal indicator, TOP side.

CPU Proximity (TC0P)

Placement Note:
TOP side of CPU.

Memory Proximity (TM0P)

Placement Note:
TOP side between main memory devices.

Memory Proximity (TM1P)

Placement Note:
BOTTOM side between main memory devices.

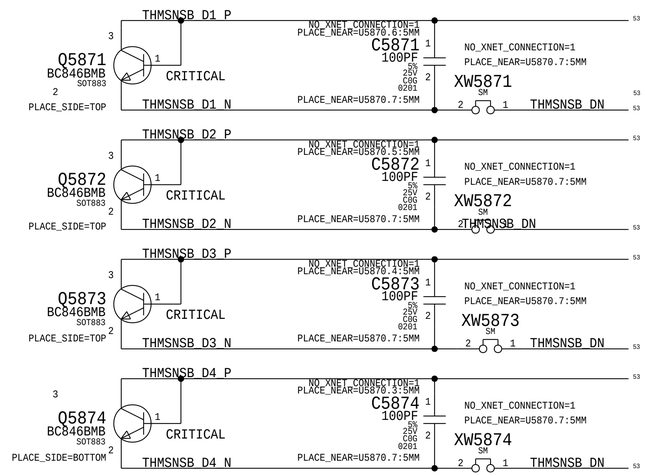

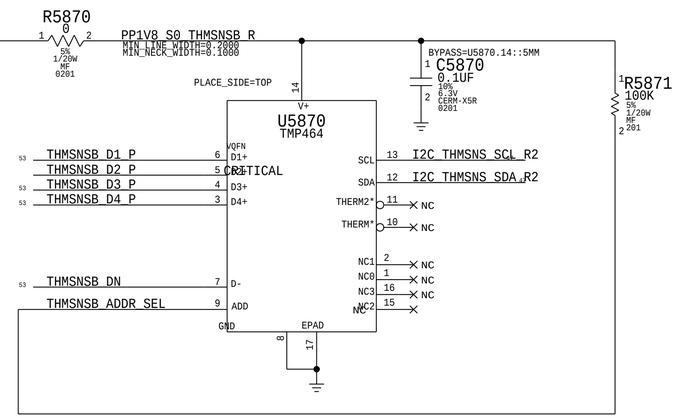

Thermal Sensor: Fin Stack (Th1H)

Placement Note:
TOP side, top right of MLB.

BOM_COST_GROUP=SENSORS

PAGE TITLE	THERMAL SENSORS
Apple Inc.	DRAWING NUMBER 051-04273 SIZE D
	REVISION 4.0.0
	BRANCH evt-1
	PAGE 58 OF 500
	SHEET 53 OF 98

NOTICE OF PROPRIETARY PROPERTY:
THE INFORMATION CONTAINED HEREIN IS THE PROPRIETARY PROPERTY OF APPLE INC.
THE POSESSOR AGREES TO THE FOLLOWING:
I TO MAINTAIN THIS DOCUMENT IN CONFIDENCE
II NOT TO REPRODUCE OR COPY IT
III NOT TO REVEAL OR PUBLISH IT IN WHOLE OR PART
IV ALL RIGHTS RESERVED

Trackpad 5V Current Sense (IT5C)

Gain: 200x, EDP: 0.0055 A
Rsense: 0.1 (R5940) or SHORT
Vsense: 0.55 mV, Range: 0.17 A
EADC1: CH6

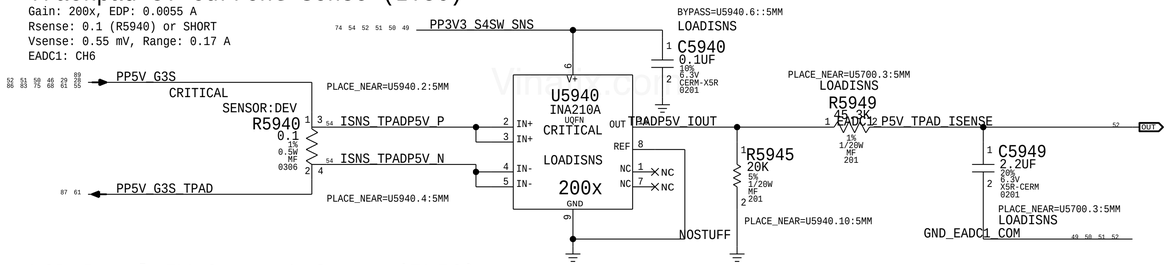

LCD Panel 5V Current Sense (IL5C)

Gain: 200x, EDP: 0.1 A
Rsense: 0.1 (R8521) or SHORT
Vsense: 10 mV, Range: 0.17 A
EADC1: CH7

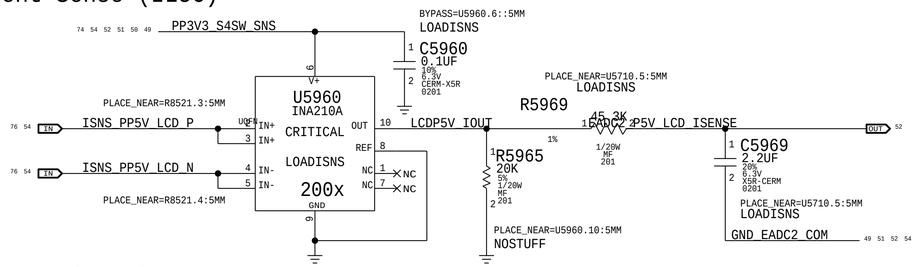

Ocarina Current Sense (IHCC)

Gain: 100x, EDP: 2.139 A
Rsense: 0.01 (R5920) or SHORT
Vsense: 21.4 mV, Range: 3.0 A
MUX: A5

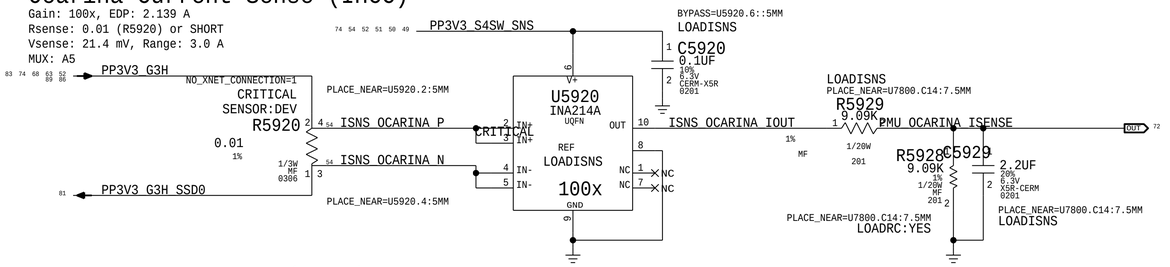

MESA Current Sense (IIDC)

Gain: 200x, EDP: 0.176 A
Rsense: 0.050 (R5530) or SHORT
Vsense: 8.8 mV, Range: 0.33 A
EADC2: CH4

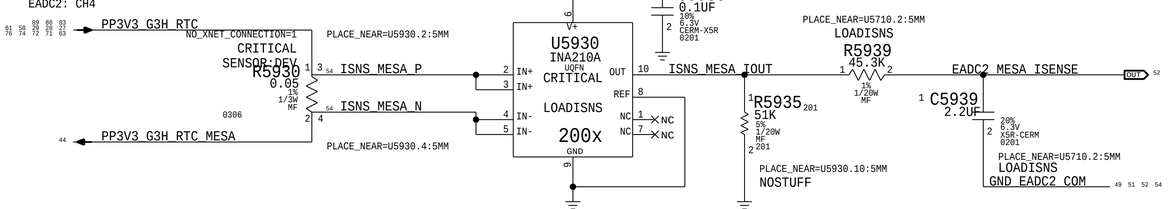

Probe Points for Power Validation

Net	Probe	Side	Near
ISNS_HS_CPU_P	TP5901	TOP	R5400:5MM
ISNS_HS_CPU_N	TP5902	TOP	R5400:5MM
ISNS_HS_OTHER5V_P	TP5903	TOP	R5410:5MM
ISNS_HS_OTHER5V_N	TP5904	TOP	R5410:5MM
ISNS_HS_OTHER3V3_P	TP5905	TOP	R5440:5MM
ISNS_HS_OTHER3V3_N	TP5906	TOP	R5440:5MM
ISNS_HS_3V3RTC_P	TP5907	TOP	R5420:5MM
ISNS_HS_3V3RTC_N	TP5908	TOP	R5420:5MM
ISNS_SSDNAND_P	TP5909	TOP	R5460:5MM
ISNS_SSDNAND_N	TP5910	TOP	R5460:5MM
ISNS_LCDBKLT_P	TP5911	TOP	R8400:30MM
ISNS_LCDBKLT_N	TP5912	TOP	R8400:30MM
ISNS_SPKRAMP_LEFT_P	TP5913	TOP	R54A0:5MM
ISNS_SPKRAMP_LEFT_N	TP5914	TOP	R54A0:5MM
ISNS_SPKRAMP_RIGHT_P	TP5915	TOP	R54B0:5MM
ISNS_SPKRAMP_RIGHT_N	TP5916	TOP	R54B0:5MM
CHGR_CSI_R_P	TP5917	TOP	R7020:5MM
CHGR_CSI_R_N	TP5918	TOP	R7020:5MM
CHGR_AMON	TP5919	TOP	
	TP5981	TOP	TP5919:5MM
CHGR_CSO_R_P	TP5920	TOP	R7060:30MM
CHGR_CSO_R_N	TP5921	TOP	R7060:30MM
CHGR_BMON	TP5922	TOP	
	TP5982	TOP	TP5922:5MM
PVCCIOS0_CS_P	TP5923	TOP	R8102:5MM
PVCCIOS0_CS_N	TP5924	TOP	R8102:5MM
ISNS_CPUDDR_P	TP5925	TOP	R8118:5MM
ISNS_CPUDDR_N	TP5926	TOP	R8118:5MM
ISNS_CPUVDDQ_P	TP5927	TOP	R5510:5MM
ISNS_CPUVDDQ_N	TP5928	TOP	R5510:5MM
ISNS_DFR3V3_P	TP5929	TOP	R5520:5MM
ISNS_DFR3V3_N	TP5930	TOP	R5520:5MM
ISNS_WLANBTP3V3_P	TP5931	TOP	R5530:5MM
ISNS_WLANBTP3V3_N	TP5932	TOP	R5530:5MM
ISNS_CPUVR_P	TP5933	TOP	R5542:30MM
ISNS_CPUVR_N	TP5934	TOP	R5543:30MM
ISNS_CPUGT_P	TP5935	TOP	R5582:10MM
ISNS_CPUGT_N	TP5936	TOP	R5583:10MM
ISNS_TBTX_P	TP5937	TOP	R5640:5MM
ISNS_TBTX_N	TP5938	TOP	R5640:5MM
ISNS_LCDPANEL_P	TP5939	TOP	R8520:5MM
ISNS_LCDPANEL_N	TP5940	TOP	R8520:5MM
ISNS_TPADP3V3_P	TP5941	TOP	R5650:10MM
ISNS_TPADP3V3_N	TP5942	TOP	R5650:10MM
ISNS_WLANBTP1V8_P	TP5943	TOP	R5680:5MM
ISNS_WLANBTP1V8_N	TP5944	TOP	R5680:5MM
ISNS_CALPE_P	TP5945	TOP	R5780:5MM
ISNS_CALPE_N	TP5946	TOP	R5780:5MM
ISNS_KBBLT_P	TP5947	TOP	R5730:5MM
ISNS_KBBLT_N	TP5948	TOP	R5730:5MM
CPUSA_ISNS_R_P	TP5949	TOP	R7274:5MM
CPUSA_ISNS_R_N	TP5950	TOP	R7272:5MM
ISNS_CPUEDRAM_P	TP5951	TOP	R7702:5MM
ISNS_CPUEDRAM_N	TP5952	TOP	R7702:5MM
ISNS_TPADP5V_P	TP5953	TOP	R5940:10MM
ISNS_TPADP5V_N	TP5954	TOP	R5940:10MM
ISNS_PP5V_LCD_P	TP5955	TOP	R8521:5MM
ISNS_PP5V_LCD_N	TP5956	TOP	R8521:5MM
ISNS_OCARINA_P	TP5957	TOP	R5920:5MM
ISNS_OCARINA_N	TP5958	TOP	R5920:5MM
ISNS_MESA_P	TP5959	TOP	R5930:5MM
ISNS_MESA_N	TP5960	TOP	R5930:5MM
PPVPCORE_S5	TP5961	TOP	L7820:5MM
PVCC_FB_P	TP5962	TOP	R0850:10MM
PP1V_PRIM	TP5963	TOP	L821:5MM
P1VPRIM_FB_R	TP5964	TOP	R0853:10MM
ISNS_KBDP3V3_P	TP5965	TOP	R5690:5MM
ISNS_KBDP3V3_N	TP5966	TOP	R5690:5MM
ISNS_P5VCPUREGMISC_P	TP5967	TOP	R5660:5MM
ISNS_P5VCPUREGMISC_N	TP5968	TOP	R5660:5MM
ISNS_P1V8LPDDR_P	TP5969	TOP	R5630:5MM
ISNS_P1V8LPDDR_N	TP5970	TOP	R5630:5MM
ISNS_P1V8G3S_P	TP5971	TOP	R56B0:5MM
ISNS_P1V8G3S_N	TP5972	TOP	R56B0:5MM
	TP5983	TOP	
	TP5984	TOP	
	TP5985	TOP	
	TP5986	TOP	

PART NUMBER	QTY	DESCRIPTION	REFERENCE DES	CRITICAL	BOM OPTION
117S0008	2	RES,MTL FLIM,100K,1/16W,0201,SMD,LF	R5928		LOADRC:NO

BOM_COST_GROUP=SENSORS

PAGE TITLE: POWER SENSORS EXTENDED 3

Apple Inc.

DRAWING NUMBER: 051-04273 SIZE: D
REVISION: 4.0.0
BRANCH: evt-1
PAGE: 59 OF 500
SHEET: 54 OF 98

NOTICE OF PROPRIETARY PROPERTY:
THE INFORMATION CONTAINED HEREIN IS THE PROPRIETARY PROPERTY OF APPLE INC.
THE POSESSOR AGREES TO THE FOLLOWING:
I TO MAINTAIN THIS DOCUMENT IN CONFIDENCE
II NOT TO REPRODUCE OR COPY IT
III NOT TO REVEAL OR PUBLISH IT IN WHOLE OR PART
IV ALL RIGHTS RESERVED

Vinafix.com

FAN CONTROL

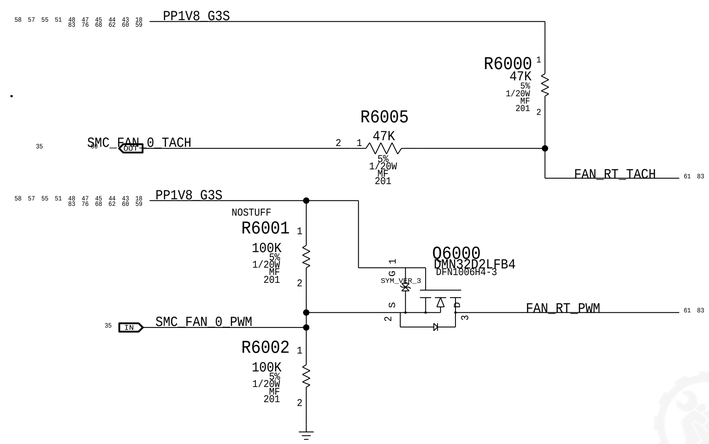

FOR DEBUG FAN POWER

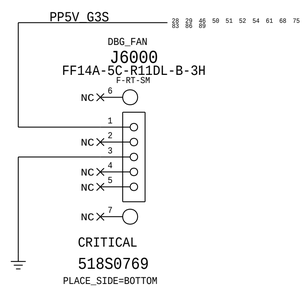

BOM_COST_GROUP=FAN

SYNC_MASTER=J213_KEI SYNC_DATE=05/31/2018

PAGE TITLE
FANS/SMC/AMUX SUPPORT

Apple Inc.

DRAWING NUMBER 051-04273 SIZE D

REVISION 4.0.0

BRANCH evt-1

PAGE 60 OF 500

SHEET 55 OF 98

NOTICE OF PROPRIETARY PROPERTY:
THE INFORMATION CONTAINED HEREIN IS THE PROPRIETARY PROPERTY OF APPLE INC.
THE POSESSOR AGREES TO THE FOLLOWING:
I TO MAINTAIN THIS DOCUMENT IN CONFIDENCE
II NOT TO REPRODUCE OR COPY IT
III NOT TO REVEAL OR PUBLISH IT IN WHOLE OR PART
IV ALL RIGHTS RESERVED

Vinafix.com

BOM_COST_GROUP=AUDIO

SYNC_MASTER=J213_MLB_0P158 SYNC_DATE=05/29/2018

PAGE TITLE

AUDIO PLACEHOLDER

Apple Inc.

DRAWING NUMBER 051-04273

SIZE D

REVISION 4.0.0

BRANCH evt-1

PAGE 62 OF 500

SHEET 56 OF 98

NOTICE OF PROPRIETARY PROPERTY:

THE INFORMATION CONTAINED HEREIN IS THE PROPRIETARY PROPERTY OF APPLE INC.
THE POSESSOR AGREES TO THE FOLLOWING:

I TO MAINTAIN THIS DOCUMENT IN CONFIDENCE
II NOT TO REPRODUCE OR COPY IT
III NOT TO REVEAL OR PUBLISH IT IN WHOLE OR PART
IV ALL RIGHTS RESERVED

AUDIO JACK CODEC I2C ADDRESS		
AD1	AD0	ADDRESS
GND	GND	0x48 <--
GND	1.8V	0x49
1.8V	GND	0x4A
1.8V	1.8V	0x4B

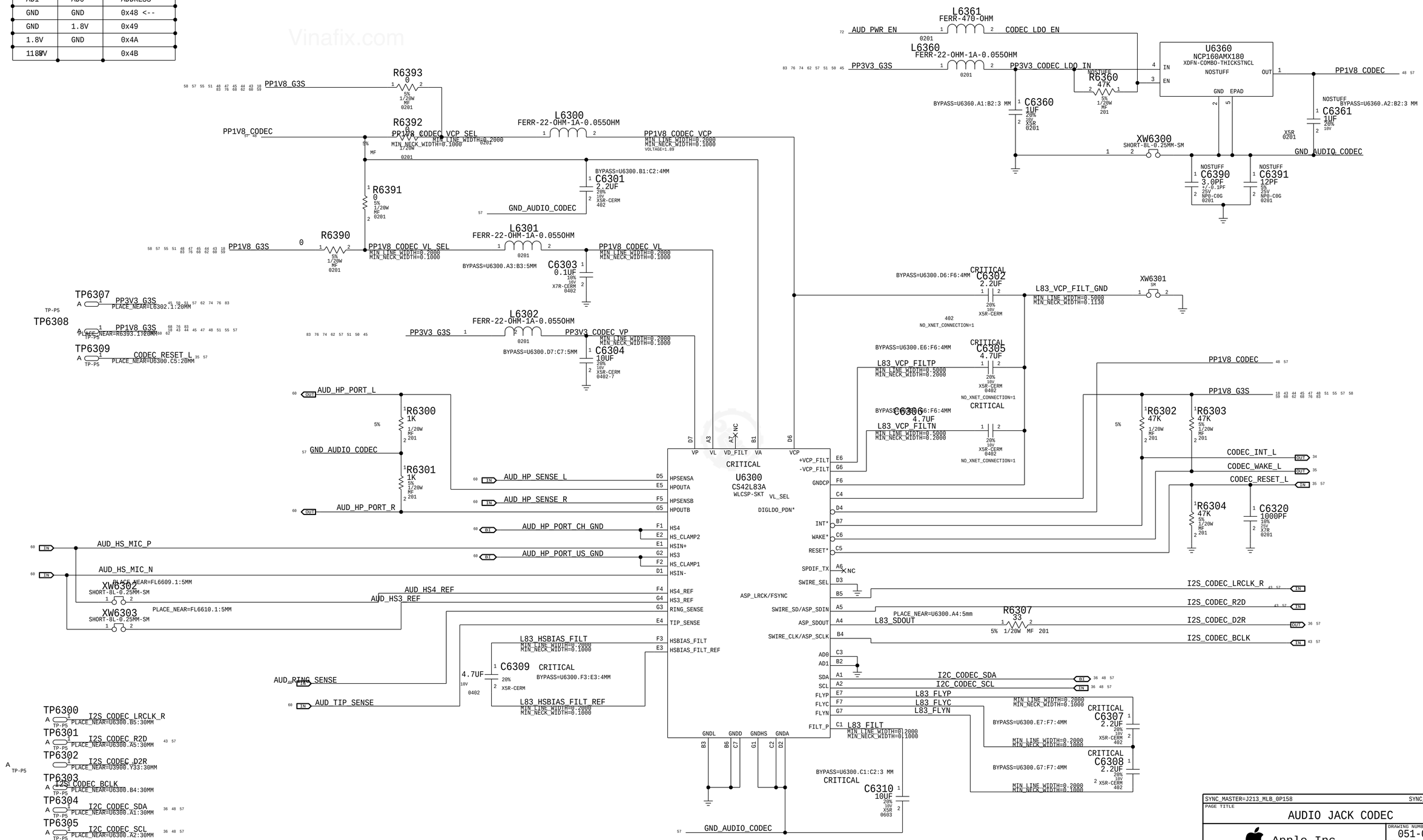

SYNC_MASTER=J213_MLB_0P15B SYNC_DATE=05/29/2018

PAGE TITLE
AUDIO JACK CODEC

Apple Inc.

DRAWING NUMBER 051-04273 SIZE D

REVISION 4.0.0

BRANCH evt-1

PAGE 63 OF 500

SHEET 57 OF 98

NOTICE OF PROPRIETARY PROPERTY:
THE INFORMATION CONTAINED HEREIN IS THE PROPRIETARY PROPERTY OF APPLE INC.
THE POSESSOR AGREES TO THE FOLLOWING:
I TO MAINTAIN THIS DOCUMENT IN CONFIDENCE
II NOT TO REPRODUCE OR COPY IT
III NOT TO REVEAL OR PUBLISH IT IN WHOLE OR PART
IV ALL RIGHTS RESERVED

2X MONO SPEAKER LEFT AMPLIFIERS

APN: 353S01252
GAIN: 0DBFS = xxVRMS

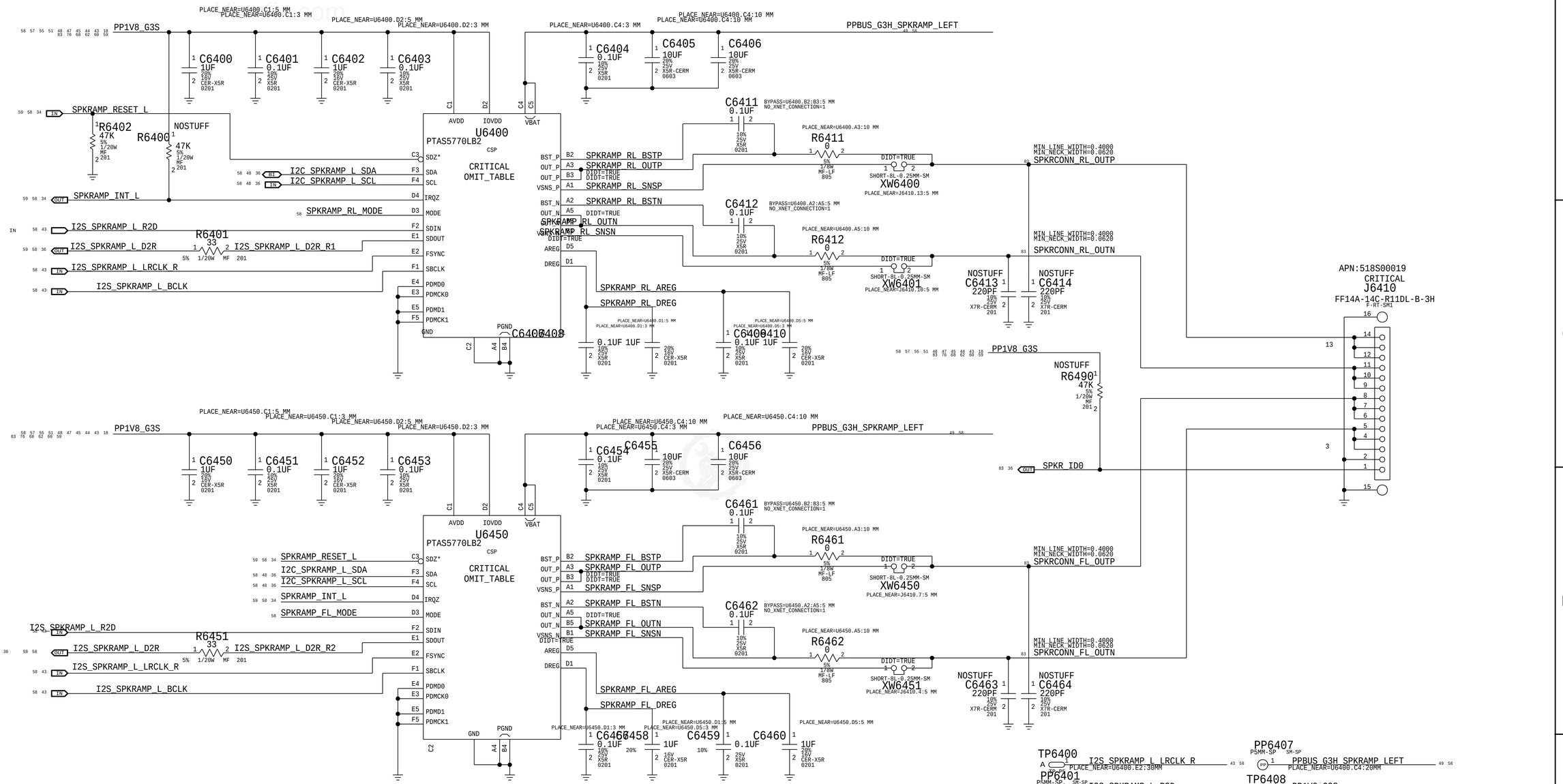

MODE PIN	I2C ADDR	CHANNEL
GND	0x31	REAR LEFT
470 to GND	0x32	FRONT LEFT
470 to IOVDD	0x33	REAR RIGHT
2k2 to GND	0x34	FRONT RIGHT
2k2 to IOVDD	0x35	
10k to GND	0x36	
10k to IOVDD	0x37	
47k to IOVDD	0x38	

SYNC_MASTER=J213_TROY SYNC_DATE=12/11/2018

PAGE TITLE
AUDIO LEFT AMPLIFIERS

Apple Inc.

DRAWING NUMBER 051-04273 SIZE D
REVISION 4.0.0
BRANCH evt-1
PAGE 64 OF 500
SHEET 58 OF 98

NOTICE OF PROPRIETARY PROPERTY:
THE INFORMATION CONTAINED HEREIN IS THE PROPRIETARY PROPERTY OF APPLE INC.
THE POSESSOR AGREES TO THE FOLLOWING:
I TO MAINTAIN THIS DOCUMENT IN CONFIDENCE
II NOT TO REPRODUCE OR COPY IT
III NOT TO REVEAL OR PUBLISH IT IN WHOLE OR PART
IV ALL RIGHTS RESERVED

2X MONO SPEAKER RIGHT AMPLIFIERS

APN: 353S01252
GAIN: 0DBFS = xxVRMS

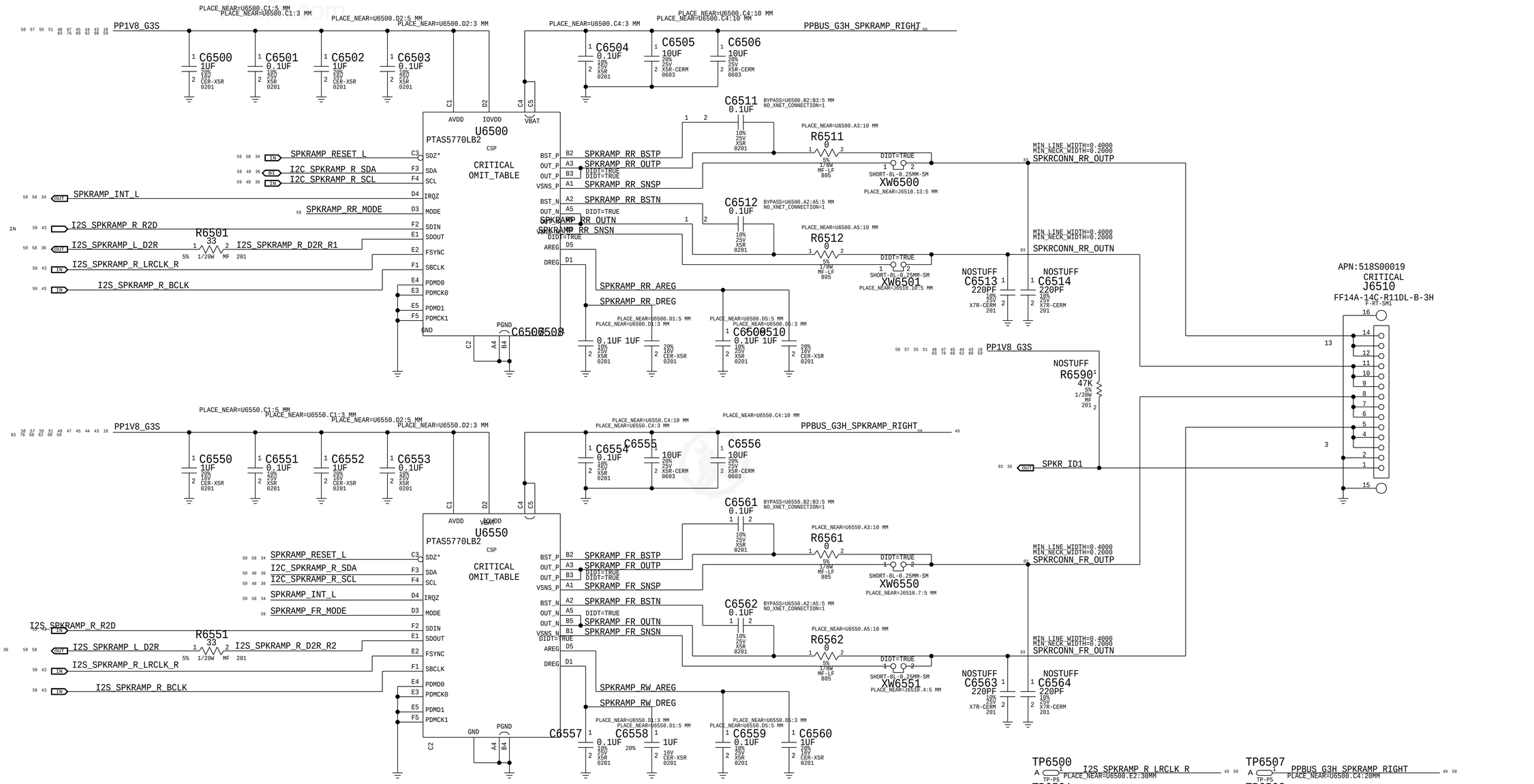

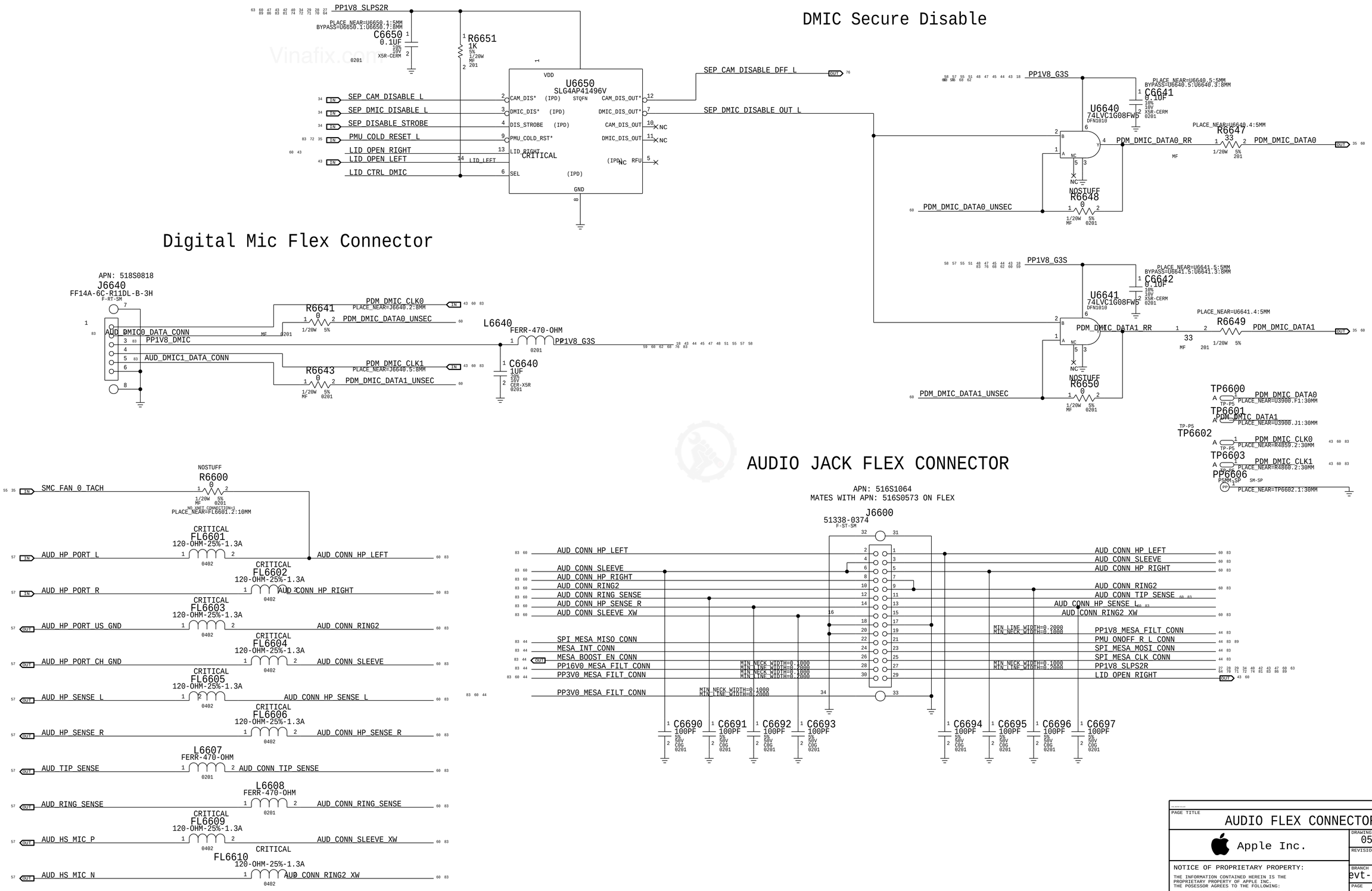

PAGE TITLE

AUDIO FLEX CONNECTORS

Apple Inc.

NOTICE OF PROPRIETARY PROPERTY:
THE INFORMATION CONTAINED HEREIN IS THE PROPRIETARY PROPERTY OF APPLE INC.
THE POSESSOR AGREES TO THE FOLLOWING:
I TO MAINTAIN THIS DOCUMENT IN CONFIDENCE
II NOT TO REPRODUCE OR COPY IT
III NOT TO REVEAL OR PUBLISH IT IN WHOLE OR PART
IV ALL RIGHTS RESERVED

DRAWING NUMBER	051-04273
SIZE	D
REVISION	4.0.0
BRANCH	evt-1
PAGE	66 OF 500
SHEET	60 OF 98

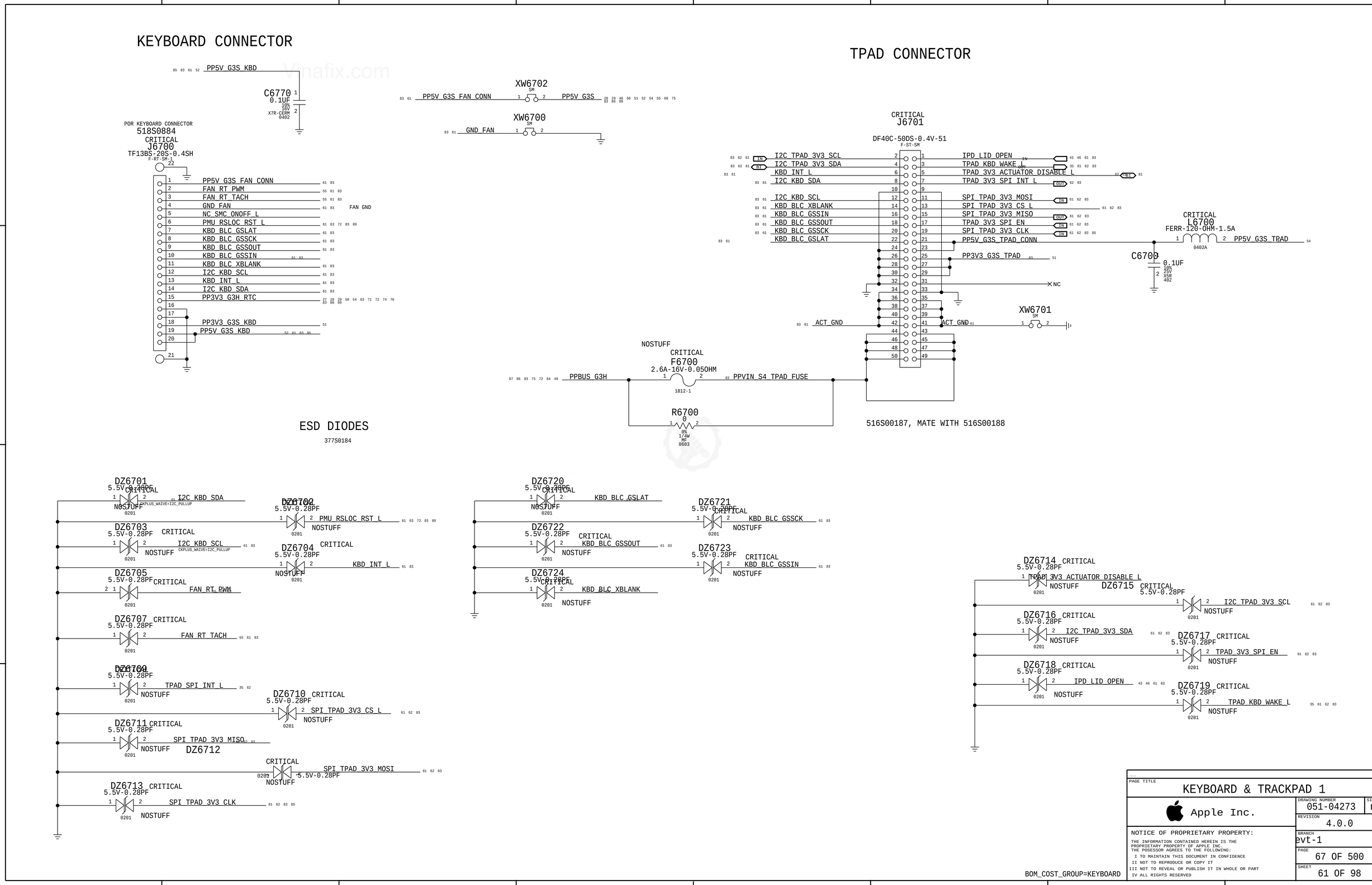
KEYBOARD CONNECTOR
TPAD CONNECTOR
ESD DIODES
377S0184
516S00187, MATE WITH 516S00188
PP5V G3S KBD
C6770 0.1UF 10% 10V X7R-CERM 0402
XW6702 SM
PP5V G3S FAN CONN
PP5V G3S
XW6700 SM
GND_FAN
POR KEYBOARD CONNECTOR
518S0884
CRITICAL
J6700
TF13BS-20S-0.4SH
F-RT-SM-1
PP5V G3S FAN CONN
FAN RT PWM
FAN RT TACH
GND_FAN
FAN GND
NC_SMC_ONOFF_L
PMU RSLOC RST L
KBD BLC GSLAT
KBD BLC GSSCK
KBD BLC GSSOUT
KBD BLC GSSIN
KBD BLC XBLANK
I2C KBD SCL
KBD INT L
I2C KBD SDA
PP3V3 G3H RTC
PP3V3 G3S KBD
PP5V G3S KBD
CRITICAL
J6701
DF40C-50DS-0.4V-51
F-ST-SM
I2C TPAD 3V3 SCL
I2C TPAD 3V3 SDA
KBD INT L
I2C KBD SDA
I2C KBD SCL
KBD BLC XBLANK
KBD BLC GSSIN
KBD BLC GSSOUT
KBD BLC GSSCK
KBD BLC GSLAT
IPD LID OPEN
TPAD KBD WAKE L
TPAD 3V3 ACTUATOR DISABLE L
TPAD 3V3 SPI INT L
SPI TPAD 3V3 MOSI
SPI TPAD 3V3 CS L
SPI TPAD 3V3 MISO
TPAD 3V3 SPI EN
SPI TPAD 3V3 CLK
PP5V G3S TPAD CONN
PP3V3 G3S TPAD
NC
ACT_GND
XW6701 SM
CRITICAL
L6700
FERR-120-OHM-1.5A
0402A
PP5V G3S TPAD
C6700 0.1UF 10% 25V X5R 402
NOSTUFF
CRITICAL
F6700
2.6A-16V-0.050HM
1812-1
PPBUS G3H
PPVIN S4 TPAD FUSE
R6700 0 5% 1/4W MF 0603
DZ6701 CRITICAL 5.5V-0.28PF I2C KBD SDA
DZ6702 5.5V-0.28PF PMU RSLOC RST L
DZ6703 5.5V-0.28PF CRITICAL I2C KBD SCL
DZ6704 CRITICAL 5.5V-0.28PF KBD INT L
DZ6705 5.5V-0.28PF CRITICAL FAN RT PWM
DZ6707 CRITICAL 5.5V-0.28PF FAN RT TACH
DZ6709 5.5V-0.28PF TPAD SPI INT L
DZ6710 CRITICAL 5.5V-0.28PF SPI TPAD 3V3 CS L
DZ6711 CRITICAL 5.5V-0.28PF SPI TPAD 3V3 MISO
DZ6712 CRITICAL 5.5V-0.28PF SPI TPAD 3V3 MOSI
DZ6713 CRITICAL 5.5V-0.28PF SPI TPAD 3V3 CLK
DZ6720 5.5V-0.28PF CRITICAL KBD BLC GSLAT
DZ6721 5.5V-0.28PF CRITICAL KBD BLC GSSCK
DZ6722 5.5V-0.28PF CRITICAL KBD BLC GSSOUT
DZ6723 5.5V-0.28PF CRITICAL KBD BLC GSSIN
DZ6724 5.5V-0.28PF CRITICAL KBD BLC XBLANK
DZ6714 CRITICAL 5.5V-0.28PF TPAD 3V3 ACTUATOR DISABLE L
DZ6715 CRITICAL 5.5V-0.28PF I2C TPAD 3V3 SCL
DZ6716 CRITICAL 5.5V-0.28PF I2C TPAD 3V3 SDA
DZ6717 CRITICAL 5.5V-0.28PF TPAD 3V3 SPI EN
DZ6718 CRITICAL 5.5V-0.28PF IPD LID OPEN
DZ6719 CRITICAL 5.5V-0.28PF TPAD KBD WAKE L
BOM_COST_GROUP=KEYBOARD
PAGE TITLE
KEYBOARD & TRACKPAD 1
Apple Inc.
DRAWING NUMBER 051-04273
SIZE D
REVISION 4.0.0
BRANCH evt-1
PAGE 67 OF 500
SHEET 61 OF 98
NOTICE OF PROPRIETARY PROPERTY:
THE INFORMATION CONTAINED HEREIN IS THE PROPRIETARY PROPERTY OF APPLE INC.
THE POSESSOR AGREES TO THE FOLLOWING:
I TO MAINTAIN THIS DOCUMENT IN CONFIDENCE
II NOT TO REPRODUCE OR COPY IT
III NOT TO REVEAL OR PUBLISH IT IN WHOLE OR PART
IV ALL RIGHTS RESERVED

Trackpad Level Shifting

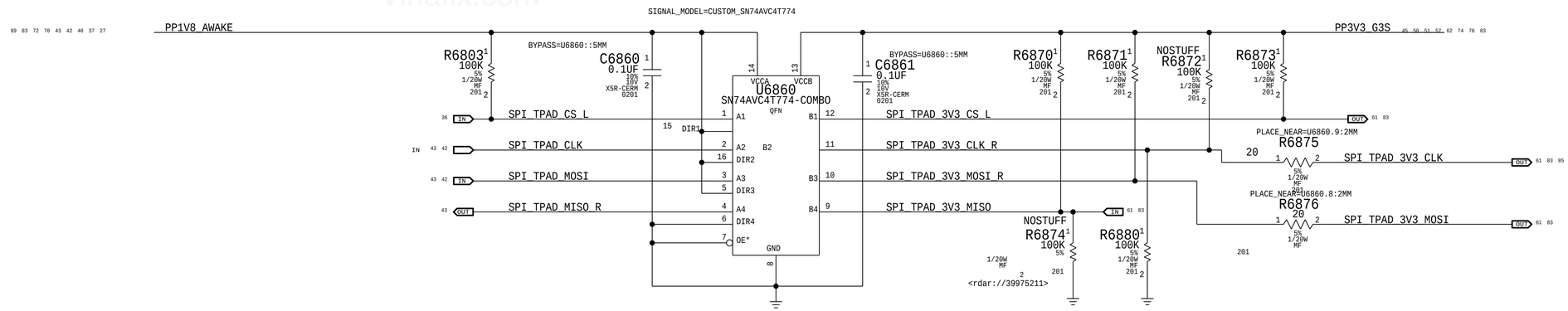

I2C FOR TEMPERATURE SENSOR ON TPAD

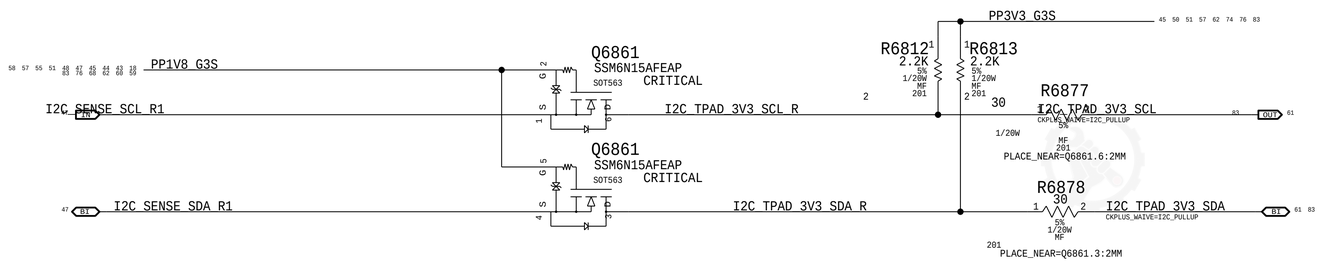

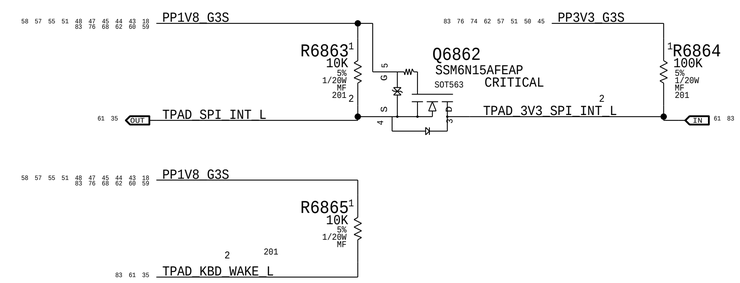

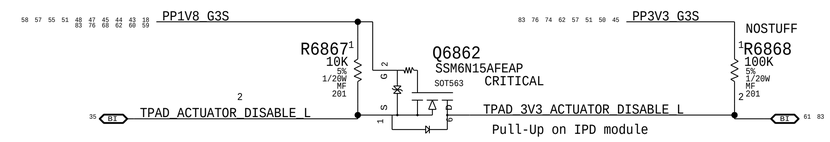

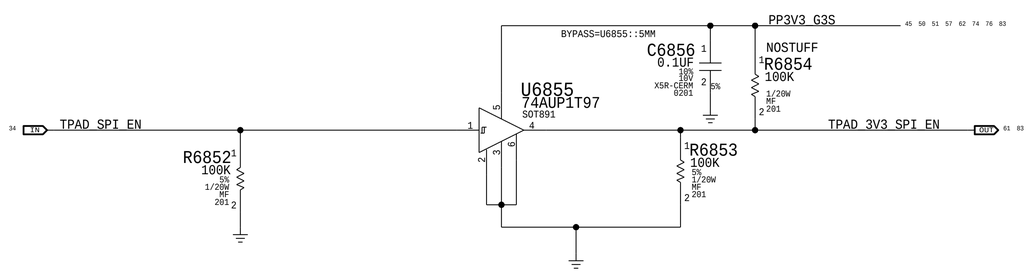

BOM_COST_GROUP=TRACKPAD

PAGE TITLE	KEYBOARD & TRACKPAD 2
Apple Inc.	DRAWING NUMBER 051-04273 SIZE D
	REVISION 4.0.0
	BRANCH evt-1
	PAGE 68 OF 500
	SHEET 62 OF 98

NOTICE OF PROPRIETARY PROPERTY:
THE INFORMATION CONTAINED HEREIN IS THE PROPRIETARY PROPERTY OF APPLE INC.
THE POSESSOR AGREES TO THE FOLLOWING:
I TO MAINTAIN THIS DOCUMENT IN CONFIDENCE
II NOT TO REPRODUCE OR COPY IT
III NOT TO REVEAL OR PUBLISH IT IN WHOLE OR PART
IV ALL RIGHTS RESERVED

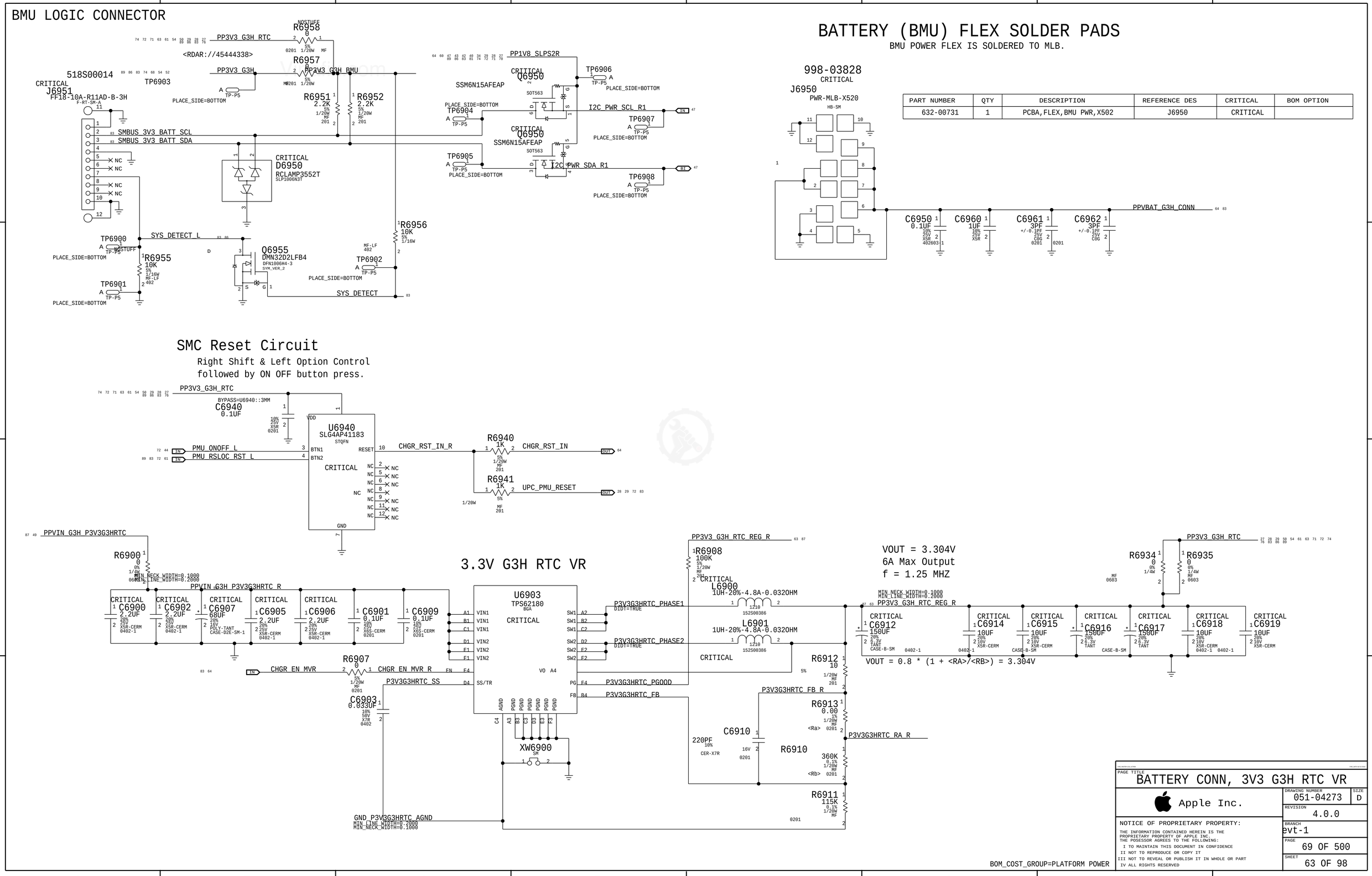
BMU LOGIC CONNECTOR
518S00014
CRITICAL
J6951
FF18-10A-R11AD-B-3H
F-RT-SM-A
TP6903
PP3V3_G3H_RTC
R6958
NOSTUFF
<RDAR://45444338>
R6957
PP3V3_G3H
PP3V3_G3H_BMU
PLACE_SIDE=BOTTOM
R6951
2.2K
R6952
2.2K
SMBUS_3V3_BATT_SCL
SMBUS_3V3_BATT_SDA
CRITICAL
D6950
RCLAMP3552T
SLP1006N3T
PP1V8_SLPS2R
CRITICAL
Q6950
SSM6N15AFEAP
TP6906
TP6904
TP6907
I2C_PWR_SCL_R1
TP6905
TP6908
I2C_PWR_SDA_R1
R6956
10K
TP6900
SYS_DETECT_L
R6955
10K
TP6901
Q6955
DMN32D2LFB4
TP6902
SYS_DETECT
BATTERY (BMU) FLEX SOLDER PADS
BMU POWER FLEX IS SOLDERED TO MLB.
998-03828
CRITICAL
J6950
PWR-MLB-X520
HB-SM
PPVBAT_G3H_CONN
C6950 0.1UF
C6960 1UF
C6961 3PF
C6962 3PF
SMC Reset Circuit
Right Shift & Left Option Control
followed by ON OFF button press.
PP3V3_G3H_RTC
C6940
0.1UF
U6940
SLG4AP41183
STQFN
PMU_ONOFF_L
PMU_RSLOC_RST_L
CHGR_RST_IN_R
R6940
1K
CHGR_RST_IN
R6941
1K
UPC_PMU_RESET
PPVIN_G3H_P3V3G3HRTC
R6900
PPVIN_G3H_P3V3G3HRTC_R
3.3V G3H RTC VR
U6903
TPS62180
BGA
CHGR_EN_MVR
R6907
CHGR_EN_MVR_R
P3V3G3HRTC_SS
C6903
0.033UF
P3V3G3HRTC_PHASE1
P3V3G3HRTC_PHASE2
P3V3G3HRTC_PGOOD
P3V3G3HRTC_FB
XW6900
GND_P3V3G3HRTC_AGND
PP3V3_G3H_RTC_REG_R
R6908
100K
L6900
1UH-20%-4.8A-0.032OHM
L6901
1UH-20%-4.8A-0.032OHM
VOUT = 3.304V
6A Max Output
f = 1.25 MHZ
PP3V3_G3H_RTC_REG_R
C6912
150UF
C6914
10UF
C6915
10UF
C6916
150UF
C6917
150UF
C6918
10UF
C6919
10UF
VOUT = 0.8 * (1 + <RA>/<RB>) = 3.304V
R6934
R6935
R6912
10
P3V3G3HRTC_FB_R
R6913
0.00
P3V3G3HRTC_RA_R
C6910
220PF
R6910
360K
R6911
115K
BOM_COST_GROUP=PLATFORM POWER
PAGE TITLE
BATTERY CONN, 3V3 G3H RTC VR
Apple Inc.
DRAWING NUMBER
051-04273
SIZE
D
REVISION
4.0.0
BRANCH
evt-1
PAGE
69 OF 500
SHEET
63 OF 98
NOTICE OF PROPRIETARY PROPERTY:
THE INFORMATION CONTAINED HEREIN IS THE PROPRIETARY PROPERTY OF APPLE INC.
THE POSESSOR AGREES TO THE FOLLOWING:
I TO MAINTAIN THIS DOCUMENT IN CONFIDENCE
II NOT TO REPRODUCE OR COPY IT
III NOT TO REVEAL OR PUBLISH IT IN WHOLE OR PART
IV ALL RIGHTS RESERVED

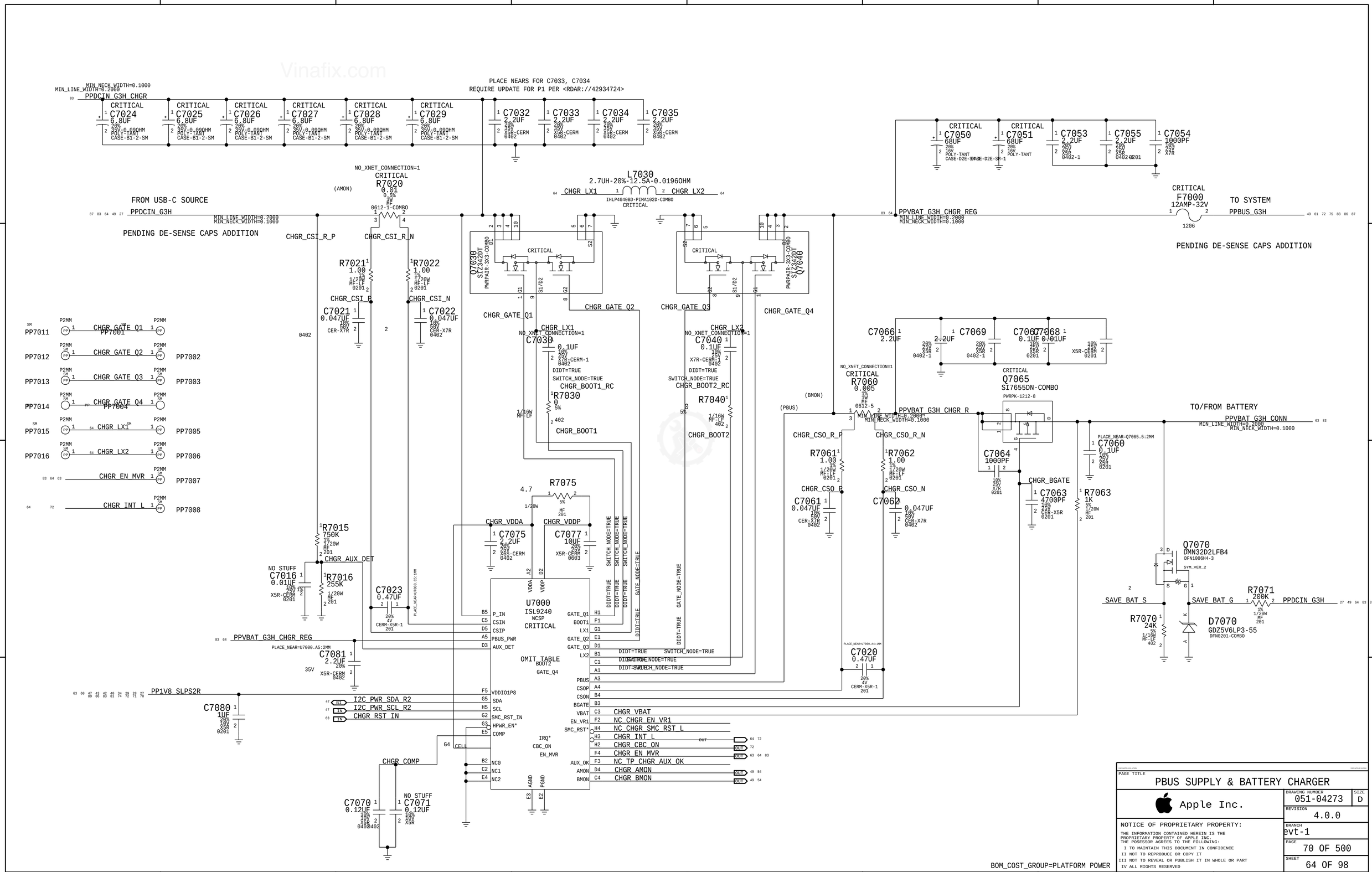
PPDCIN G3H CHGR
MIN_NECK_WIDTH=0.1000
MIN_LINE_WIDTH=0.2000
PLACE NEARS FOR C7033, C7034
REQUIRE UPDATE FOR P1 PER <RDAR://42934724>
C7024 6.8UF
C7025 6.8UF
C7026 6.8UF
C7027 6.8UF
C7028 6.8UF
C7029 6.8UF
C7032 2.2UF
C7033 2.2UF
C7034 2.2UF
C7035 2.2UF
C7050 68UF
C7051 68UF
C7053 2.2UF
C7055 2.2UF
C7054 1000PF
L7030
2.7UH-20%-12.5A-0.0196OHM
CHGR_LX1
CHGR_LX2
IHLP4040BD-PIMA102D-COMBO
CRITICAL
NO_XNET_CONNECTION=1
R7020 0.01
FROM USB-C SOURCE
PPDCIN G3H
PENDING DE-SENSE CAPS ADDITION
PPVBAT G3H CHGR REG
F7000 12AMP-32V
TO SYSTEM
PPBUS G3H
CHGR_CSI_R_P
CHGR_CSI_R_N
R7021 1.00
R7022 1.00
CHGR_CSI_P
CHGR_CSI_N
C7021 0.047UF
C7022 0.047UF
Q7030 SI7342DT
Q7040 SI7342DT
CHGR_GATE_Q1
CHGR_GATE_Q2
CHGR_GATE_Q3
CHGR_GATE_Q4
C7030 0.1UF
C7040 0.1UF
R7030 0
R7040 0
CHGR_BOOT1_RC
CHGR_BOOT2_RC
CHGR_BOOT1
CHGR_BOOT2
C7066 2.2UF
C7069 2.2UF
C7067 0.1UF
C7068 0.01UF
R7060 0.005
Q7065 SI7655DN-COMBO
PPVBAT G3H CHGR R
TO/FROM BATTERY
PPVBAT G3H CONN
R7061 1.00
R7062 1.00
C7064 1000PF
C7060 0.1UF
C7061 0.047UF
C7062 0.047UF
C7063 4700PF
R7063 1K
CHGR_CSO_R_P
CHGR_CSO_R_N
CHGR_CSO_P
CHGR_CSO_N
CHGR_BGATE
Q7070 DMN32D2LFB4
SAVE_BAT_S
SAVE_BAT_G
R7071 200K
PPDCIN G3H
R7070 24K
D7070 GDZ5V6LP3-55
PP7011 CHGR_GATE_Q1 PP7001
PP7012 CHGR_GATE_Q2 PP7002
PP7013 CHGR_GATE_Q3 PP7003
PP7014 CHGR_GATE_Q4 PP7004
PP7015 CHGR_LX1 PP7005
PP7016 CHGR_LX2 PP7006
CHGR_EN_MVR PP7007
CHGR_INT_L PP7008
R7015 750K
CHGR_AUX_DET
C7016 0.01UF
R7016 255K
C7023 0.47UF
R7075 4.7
C7075 2.2UF
C7077 10UF
CHGR_VDDA
CHGR_VDDP
U7000 ISL9240 WCSP CRITICAL
OMIT_TABLE
PPVBAT G3H CHGR REG
C7081 2.2UF
PP1V8 SLPS2R
C7080 1UF
I2C_PWR_SDA_R2
I2C_PWR_SCL_R2
CHGR_RST_IN
CHGR_COMP
C7070 0.12UF
C7071 0.12UF
NO STUFF
C7020 0.47UF
CHGR_VBAT
NC_CHGR_EN_VR1
NC_CHGR_SMC_RST_L
CHGR_INT_L
CHGR_CBC_ON
CHGR_EN_MVR
NC_TP_CHGR_AUX_OK
CHGR_AMON
CHGR_BMON
BOM_COST_GROUP=PLATFORM POWER
PAGE TITLE
PBUS SUPPLY & BATTERY CHARGER
Apple Inc.
DRAWING NUMBER 051-04273
SIZE D
REVISION 4.0.0
BRANCH evt-1
PAGE 70 OF 500
SHEET 64 OF 98
NOTICE OF PROPRIETARY PROPERTY:
THE INFORMATION CONTAINED HEREIN IS THE PROPRIETARY PROPERTY OF APPLE INC.
THE POSESSOR AGREES TO THE FOLLOWING:
I TO MAINTAIN THIS DOCUMENT IN CONFIDENCE
II NOT TO REPRODUCE OR COPY IT
III NOT TO REVEAL OR PUBLISH IT IN WHOLE OR PART
IV ALL RIGHTS RESERVED

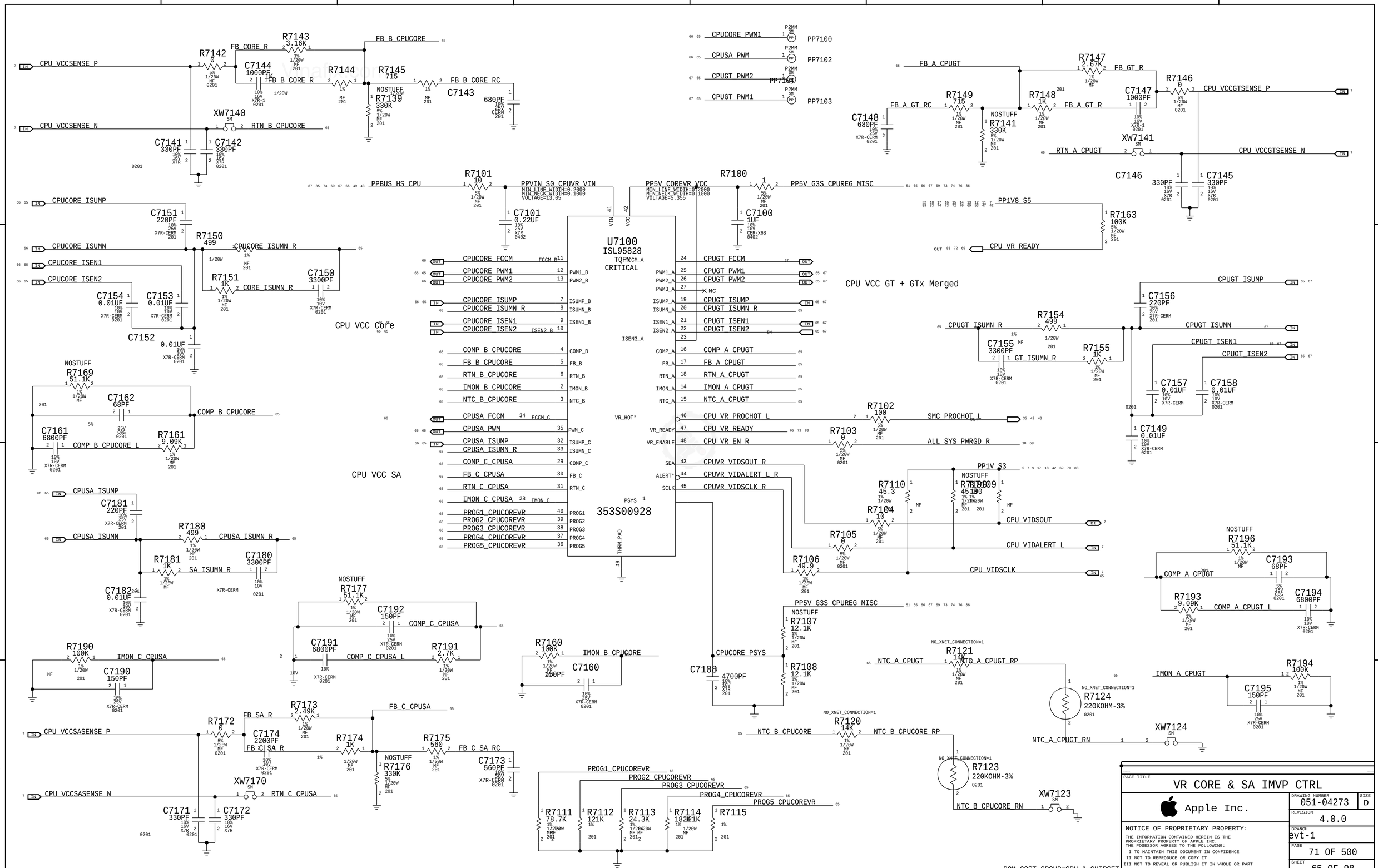
CPU VCCSENSE P
CPU VCCSENSE N
R7142 0
R7143 3.16K
FB CORE R
FB B CPUCORE
C7144 1000PF
R7144
R7145 715
FB B CORE R
FB B CORE RC
C7143 680PF
NOSTUFF
R7139 330K
XW7140
RTN B CPUCORE
C7141 330PF
C7142 330PF
CPUCORE PWM1
CPUSA PWM
CPUGT PWM2
CPUGT PWM1
PP7100
PP7102
PP7104
PP7103
FB A CPUGT
R7147 2.67K
FB GT R
R7146 0
CPU VCCGTSENSE P
R7149 715
R7148 1K
FB A GT RC
FB A GT R
C7147 1000PF
C7148 680PF
R7141 330K
XW7141
RTN A CPUGT
CPU VCCGTSENSE N
C7146 330PF
C7145 330PF
CPUCORE ISUMP
C7151 220PF
R7150 499
CPUCORE ISUMN
CPUCORE ISUMN R
CPUCORE ISEN1
CPUCORE ISEN2
R7151 1K
C7150 3300PF
CORE ISUMN R
C7154 0.01UF
C7153 0.01UF
C7152 0.01UF
CPU VCC Core
PPBUS HS CPU
R7101 10
PPVIN S0 CPUVR VIN
MIN_LINE_WIDTH=0.2000
MIN_NECK_WIDTH=0.1000
VOLTAGE=13.05
C7101 0.22UF
PP5V COREVR VCC
VOLTAGE=5.355
R7100 1
PP5V G3S CPUREG MISC
C7100 1UF
U7100
ISL95828
TQFN
CRITICAL
CPUCORE FCCM
CPUCORE PWM1
CPUCORE PWM2
CPUCORE ISUMP
CPUCORE ISUMN R
CPUCORE ISEN1
CPUCORE ISEN2
COMP B CPUCORE
FB B CPUCORE
RTN B CPUCORE
IMON B CPUCORE
NTC B CPUCORE
CPUSA FCCM
CPUSA PWM
CPUSA ISUMP
CPUSA ISUMN R
COMP C CPUSA
FB C CPUSA
RTN C CPUSA
IMON C CPUSA
PROG1 CPUCOREVR
PROG2 CPUCOREVR
PROG3 CPUCOREVR
PROG4 CPUCOREVR
PROG5 CPUCOREVR
CPUGT FCCM
CPUGT PWM1
CPUGT PWM2
CPUGT ISUMP
CPUGT ISUMN R
CPUGT ISEN1
CPUGT ISEN2
COMP A CPUGT
FB A CPUGT
RTN A CPUGT
IMON A CPUGT
NTC A CPUGT
CPU VR PROCHOT L
CPU VR READY
CPU VR EN R
CPUVR VIDSOUT R
CPUVR VIDALERT L R
CPUVR VIDSCLK R
PSYS
353S00928
THRM_PAD
PP1V8 S5
R7163 100K
CPU VR READY
CPU VCC GT + GTx Merged
R7154 499
CPUGT ISUMN R
C7155 3300PF
R7155 1K
GT ISUMN R
C7156 220PF
CPUGT ISUMP
CPUGT ISUMN
CPUGT ISEN1
CPUGT ISEN2
C7157 0.01UF
C7158 0.01UF
C7149 0.01UF
R7102 100
SMC PROCHOT L
R7103 0
ALL SYS PWRGD R
PP1V S3
R7110 45.3
R7104 10
R7105 0
CPU VIDSOUT
CPU VIDALERT L
R7106 49.9
CPU VIDSCLK
NOSTUFF
R7196 51.1K
C7193 68PF
COMP A CPUGT
R7193 9.09K
C7194 6800PF
COMP A CPUGT L
R7169 51.1K
C7162 68PF
COMP B CPUCORE
C7161 6800PF
R7161 9.09K
COMP B CPUCORE L
CPU VCC SA
CPUSA ISUMP
C7181 220PF
R7180 499
CPUSA ISUMN
CPUSA ISUMN R
R7181 1K
C7180 3300PF
SA ISUMN R
C7182 0.01UF
NOSTUFF
R7177 51.1K
C7192 150PF
COMP C CPUSA
C7191 6800PF
COMP C CPUSA L
R7191 2.7K
R7190 100K
IMON C CPUSA
C7190 150PF
R7160 100K
IMON B CPUCORE
C7160 150PF
PP5V G3S CPUREG MISC
NOSTUFF
R7107 12.1K
CPUCORE PSYS
C7108 4700PF
R7108 12.1K
NTC A CPUGT
R7121 14K
NTC A CPUGT RP
R7124 220KOHM-3%
NTC A CPUGT RN
XW7124
IMON A CPUGT
R7194 100K
C7195 150PF
NTC B CPUCORE
R7120 14K
NTC B CPUCORE RP
R7123 220KOHM-3%
NTC B CPUCORE RN
XW7123
R7172 0
FB SA R
R7173 2.49K
FB C CPUSA
C7174 2200PF
FB C SA R
R7174 1K
R7175 560
FB C SA RC
NOSTUFF
R7176 330K
C7173 560PF
XW7170
RTN C CPUSA
C7171 330PF
C7172 330PF
PROG1 CPUCOREVR
PROG2 CPUCOREVR
PROG3 CPUCOREVR
PROG4 CPUCOREVR
PROG5 CPUCOREVR
R7111 78.7K
R7112 121K
R7113 24.3K
R7114 182K
R7115
BOM_COST_GROUP=CPU & CHIPSET
PAGE TITLE
VR CORE & SA IMVP CTRL
Apple Inc.
DRAWING NUMBER
051-04273
SIZE
D
REVISION
4.0.0
BRANCH
evt-1
PAGE
71 OF 500
SHEET
65 OF 98
NOTICE OF PROPRIETARY PROPERTY:
THE INFORMATION CONTAINED HEREIN IS THE PROPRIETARY PROPERTY OF APPLE INC.
THE POSESSOR AGREES TO THE FOLLOWING:
I TO MAINTAIN THIS DOCUMENT IN CONFIDENCE
II NOT TO REPRODUCE OR COPY IT
III NOT TO REVEAL OR PUBLISH IT IN WHOLE OR PART
IV ALL RIGHTS RESERVED

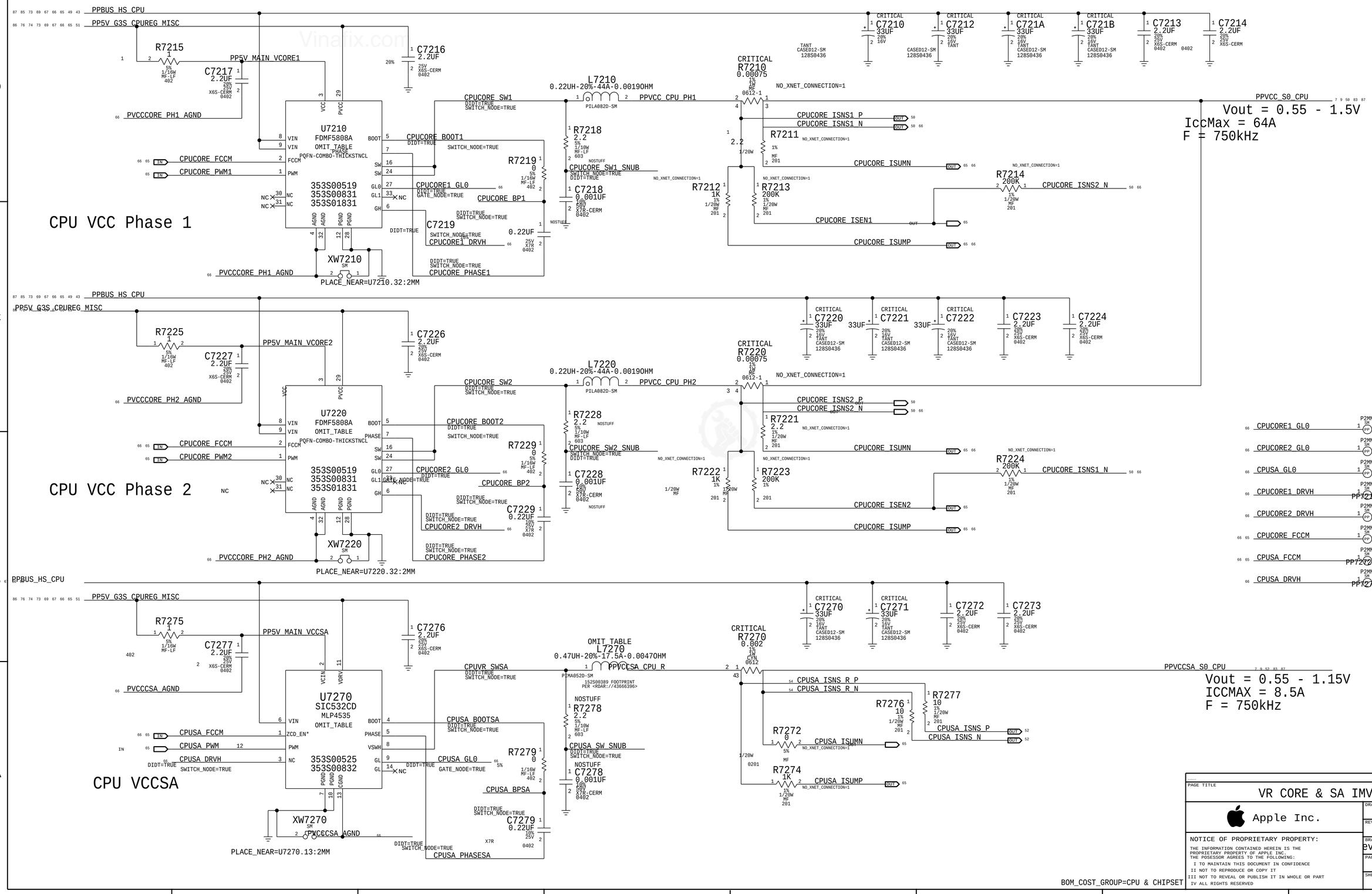

PAGE TITLE
VR CORE & SA IMVP

Apple Inc.

DRAWING NUMBER 051-04273 SIZE D
REVISION 4.0.0
BRANCH evt-1
PAGE 72 OF 500
SHEET 66 OF 98

NOTICE OF PROPRIETARY PROPERTY:
THE INFORMATION CONTAINED HEREIN IS THE PROPRIETARY PROPERTY OF APPLE INC.
THE POSESSOR AGREES TO THE FOLLOWING:
I TO MAINTAIN THIS DOCUMENT IN CONFIDENCE
II NOT TO REPRODUCE OR COPY IT
III NOT TO REVEAL OR PUBLISH IT IN WHOLE OR PART
IV ALL RIGHTS RESERVED

Vout = 0.55 - 1.5V
IccMax = 64A
F = 750kHz

CPU VCCGT/GTx Phase 1

2018/07/17 NOTE: DRIVER CONNECTIONS PRELIMINARY

PPBUS_HS_CPU
PP5V_G3S_CPUREG_MISC
R7416 1 5% 1/16W MF-LF 402 — PP5V_MAIN_VGT1
C7417 2.2UF 20% 25V X6S-CERM 0402
PVCCCGT_PH1_AGND
C7416 2.2UF 20% 25V X6S-CERM 0402
U7410 FDMF5804 PQFN-COMBO OMIT_TABLE
VIN VIN FCCM PWM NC NC NC VCC PVCC BOOT PHASE SW SW GL0 GL1 GH AGND AGND PGND PGND
CPUGT_FCCM
CPUGT_PWM1
CPUGT_SW1 DIDT=TRUE SWITCH_NODE=TRUE
CPUGT_BOOT1 DIDT=TRUE SWITCH_NODE=TRUE
CPUGT1_GL0 DIDT=TRUE SWITCH_NODE=TRUE
CPUGT_BP1 DIDT=TRUE SWITCH_NODE=TRUE
CPUGT1_DRVH DIDT=TRUE SWITCH_NODE=TRUE
CPUGT_PHASE1 DIDT=TRUE SWITCH_NODE=TRUE
R7419 0 5% 1/16W MF-LF 402
R7418 2.2 5% 1/10W MF-LF 603 NOSTUFF
CPUGT_SW1_SNUB SWITCH_NODE=TRUE DIDT=TRUE
C7418 0.001UF 10% 50V X7R-CERM 0402 NOSTUFF
C7419 0.22UF 10% 25V X7R 0402
XW7410 SM PLACE_NEAR=U7410.32:2MM
L7410 0.22UH-20%-44A-0.0019OHM PILA082D-SM
R7410 0.00075 1% 1W MF 0612-1 NO_XNET_CONNECTION=1
PPVCCGT_CPU_PH1
C7410 33UF 20% 16V TANT CASED12-SM 128S0436 CRITICAL
C7411 33UF 20% 16V TANT CASED12-SM 128S0436 128S0436 CRITICAL
C7412 33UF 20% 16V TANT CASED12-SM 128S0436 CRITICAL
C7413 2.2UF 20% 25V X6S-CERM 0402
C7414 2.2UF 20% 25V X6S-CERM 0402
PPVCCGT_S0_CPU
CPUGT_ISNS1_P
CPUGT_ISNS1_N
R7411 2.2 1% 1/20W MF 201 NO_XNET_CONNECTION=1
CPUGT_ISUMN
R7412 1K 1% 1/20W MF 201 NO_XNET_CONNECTION=1
R7413 200K 1% 1/20W MF 201 NO_XNET_CONNECTION=1
R7414 200K 1% 1/20W MF 201 NO_XNET_CONNECTION=1
CPUGT_ISNS2_N
CPUGT_ISEN1
CPUGT_ISUMP

CPU VCCGT/GTx Phase 2

2018/07/17 NOTE: DRIVER CONNECTIONS PRELIMINARY

PPBUS_HS_CPU
PP5V_G3S_CPUREG_MISC
R7426 1 5% 1/16W MF-LF — PP5V_MAIN_VGT2
C7427 2.2UF 20% 25V X6S-CERM 0402
PVCCCGT_PH2_AGND
C7426 2.2UF 20% 25V X6S-CERM 0402
U7420 FDMF5804 PQFN-COMBO OMIT_TABLE
VIN VIN FCCM PWM NC NC NC VCC PVCC BOOT PHASE SW SW GL0 GL1 GH AGND AGND PGND PGND
CPUGT_FCCM
CPUGT_PWM2
CPUGT_SW2 DIDT=TRUE SWITCH_NODE=TRUE
CPUGT_BOOT2 DIDT=TRUE SWITCH_NODE=TRUE
CPUGT2_GL0 DIDT=TRUE SWITCH_NODE=TRUE
CPUGT_BP2 DIDT=TRUE SWITCH_NODE=TRUE
CPUGT2_DRVH DIDT=TRUE SWITCH_NODE=TRUE
CPUGT_PHASE2 DIDT=TRUE SWITCH_NODE=TRUE
R7429 0 5% 1/16W MF-LF 402
R7428 2.2 5% 1/10W MF-LF 603 NOSTUFF
CPUGT_SW2_SNUB SWITCH_NODE=TRUE DIDT=TRUE
C7428 0.001UF 10% 50V X7R-CERM 0402 NOSTUFF
C7429 0.22UF 10% 25V X7R 0402
XW7420 SM PLACE_NEAR=U7420.32:2MM
L7420 0.22UH-20%-44A-0.0019OHM PILA082D-SM
R7420 0.00075 1% 1W MF 0612-1 NO_XNET_CONNECTION=1
PPVCCGT_CPU_PH2
C7420 33UF 20% 16V TANT CASED12-SM 128S0436 CRITICAL
C7421 33UF 20% 16V TANT CASED12-SM 128S0436 CRITICAL
C7423 2.2UF 20% 25V X6S-CERM 0402
C7424 2.2UF 20% 25V X6S-CERM 0402 0201
C7425 12PF 5% 25V NP0-C0G
CPUGT_ISNS2_P
CPUGT_ISNS2_N
R7421 2.2 1% 1/20W MF 201 NO_XNET_CONNECTION=1
CPUGT_ISUMN
R7422 1K 1% 1/20W MF 201 NO_XNET_CONNECTION=1
R7423 200K 1% 1/20W MF 201 NO_XNET_CONNECTION=1
R7424 200K 1% 1/20W MF 201 NO_XNET_CONNECTION=1
CPUGT_ISNS1_N
CPUGT_ISEN2
CPUGT_ISUMP

PPBUS_HS_CPU
C7430 33UF 20% 16V TANT CASED12-SM 128S0436 CRITICAL
C7431 33UF 20% 16V TANT CASED12-SM 128S0436 CRITICAL
C7432 33UF 20% 16V TANT CASED12-SM 128S0436 CRITICAL

CPUGT1_GL0 — PP7433
CPUGT2_DRVH — PP7431
CPUGT_FCCM — PP7412
CPUGT1_DRVH — PP7411
CPUGT2_GL0 — PP7430

BOM_COST_GROUP=CPU & CHIPSET

PAGE TITLE	VR GT & GTX IMVP
Apple Inc.	DRAWING NUMBER 051-04273 SIZE D
	REVISION 4.0.0
	BRANCH evt-1
	PAGE 74 OF 500
	SHEET 67 OF 98

NOTICE OF PROPRIETARY PROPERTY:
THE INFORMATION CONTAINED HEREIN IS THE PROPRIETARY PROPERTY OF APPLE INC.
THE POSESSOR AGREES TO THE FOLLOWING:
I TO MAINTAIN THIS DOCUMENT IN CONFIDENCE
II NOT TO REPRODUCE OR COPY IT
III NOT TO REVEAL OR PUBLISH IT IN WHOLE OR PART
IV ALL RIGHTS RESERVED

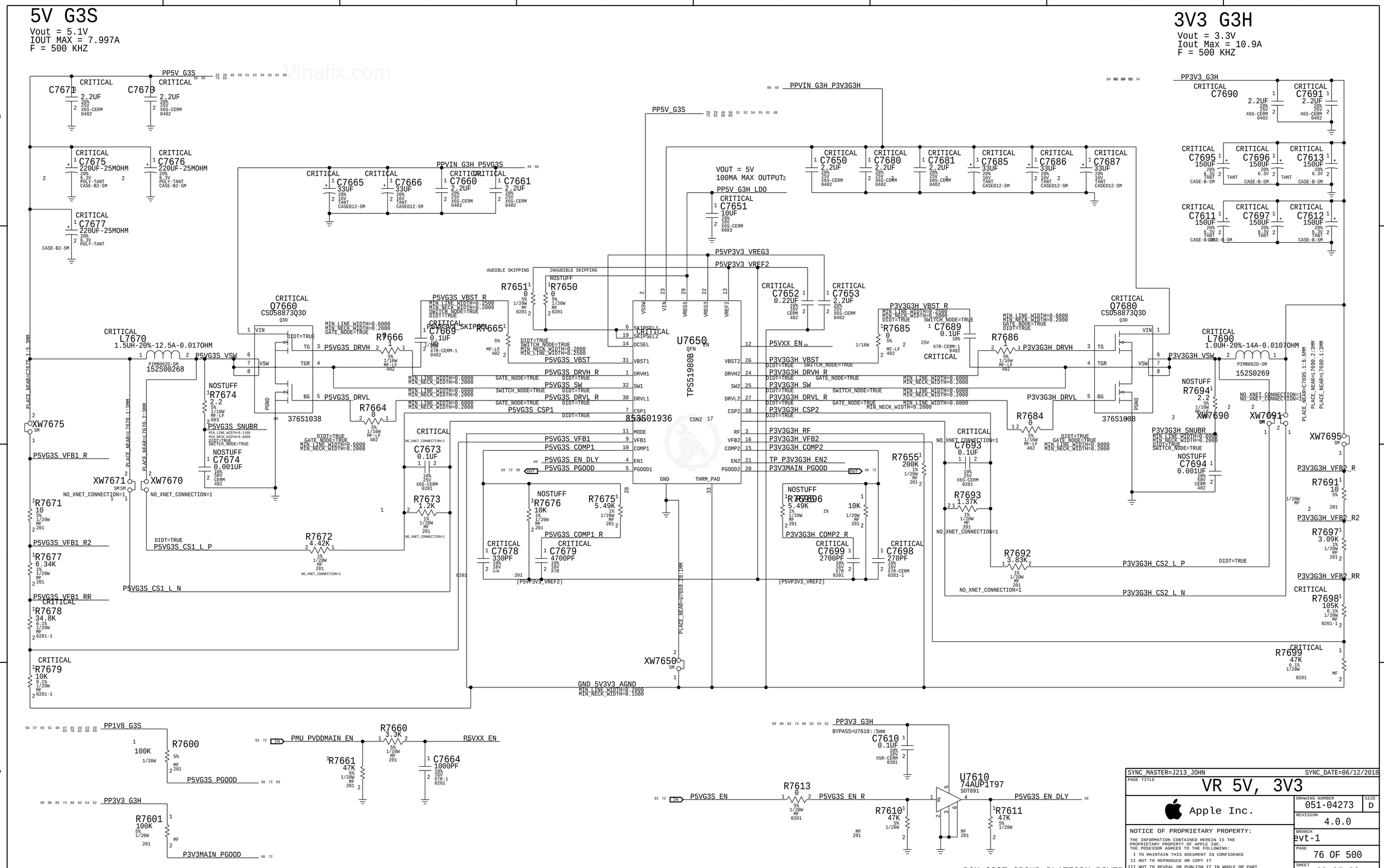

SYNC_MASTER=J213_JOHN SYNC_DATE=06/12/2018

PAGE TITLE: VR 5V, 3V3

Apple Inc.

DRAWING NUMBER: 051-04273 SIZE: D

REVISION: 4.0.0

BRANCH: evt-1

PAGE: 76 OF 500

SHEET: 68 OF 98

NOTICE OF PROPRIETARY PROPERTY:
THE INFORMATION CONTAINED HEREIN IS THE PROPRIETARY PROPERTY OF APPLE INC.
THE POSESSOR AGREES TO THE FOLLOWING:
I TO MAINTAIN THIS DOCUMENT IN CONFIDENCE
II NOT TO REPRODUCE OR COPY IT
III NOT TO REVEAL OR PUBLISH IT IN WHOLE OR PART
IV ALL RIGHTS RESERVED

1V EDRAM & EOPIO

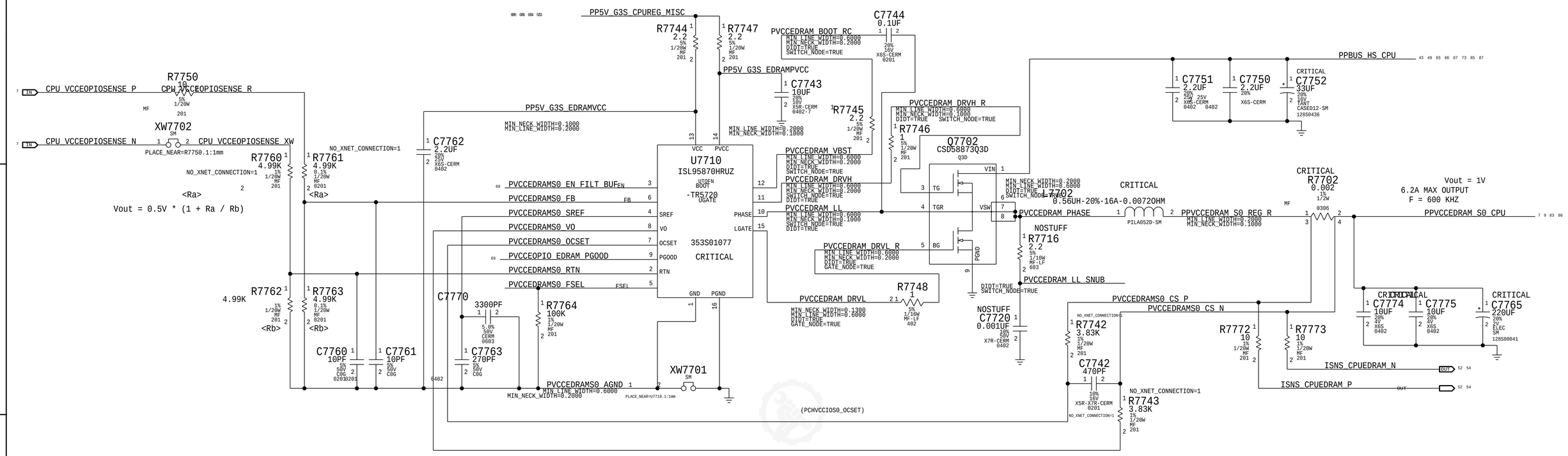

PAGE TITLE	VR EOPIO EDRAM
Apple Inc.	DRAWING NUMBER 051-04273 — SIZE D
	REVISION 4.0.0
NOTICE OF PROPRIETARY PROPERTY: THE INFORMATION CONTAINED HEREIN IS THE PROPRIETARY PROPERTY OF APPLE INC. THE POSESSOR AGREES TO THE FOLLOWING: I TO MAINTAIN THIS DOCUMENT IN CONFIDENCE II NOT TO REPRODUCE OR COPY IT III NOT TO REVEAL OR PUBLISH IT IN WHOLE OR PART IV ALL RIGHTS RESERVED	BRANCH evt-1
	PAGE 77 OF 500
	SHEET 69 OF 98

Note : Design based on Calpe ERS - D2449-A0-110-00_0v3.pdf (Radar# 24696002)
System Block Diagram - T290 Power System Architecture .v9
Optimize components for individual projects based on EDP(A)
Buck 0, 2, 5, 7, 8, 9 and 10 have option for Remote Sense.

CRITICAL
OMIT_TABLE

U7800
D2449A0P0FUAVAE2
WLCSP
SYM 2 OF 4

BUCK INPUT

PP3V3_G3H_PMU_VDDMAIN

C7801 10UF 20% 6.3V CER-X6S 0402
C7802 10UF 20% 6.3V CER-X6S 0402
C7803 10UF 20% 6.3V CER-X6S 0402
C7804 10UF 20% 6.3V CER-X6S 0402
C7805 10UF 20% 6.3V CER-X6S
C7806 10UF 20% 6.3V 0402
C7807 10UF 20% 6.3V 0402
C7808 10UF 20% 6.3V CER-X6S 0402
C7809 10UF 20% 6.3V CER-X6S 0402
C7810 10UF 20% 6.3V CER-X6S 0402
C7891 10UF 20% 6.3V CER-X6S 0402
C7895 10UF 20% 6.3V CER-X6S 0402
C78A3 10UF 20% 6.3V CER-X6S 0402
C78E2 10UF 20% 6.3V CER-X6S 0402

Resistor Divider from PBUS
PMU_VDD_HI
PP1V8_SLPS2R_PMUVDDGPIO
MIN_LINE_WIDTH=0.2000
MIN_NECK_WIDTH=0.1000
VOLTAGE=1.89
C7800 0.1UF 10% 6.3V X6S 0201

C7892 1UF 20% 6.3V X6S-CERM 0201
C7893 1UF 6.3V X6S-CERM 0201
C7894 1UF 20% 6.3V X6S-CERM 0201
C78A0 1UF 6.3V X6S-CERM 0201
C78A1 1UF 20% 6.3V X6S-CERM 0201
C78A2 1UF 20% 6.3V X6S-CERM 0201
C78CA 1UF 6.3V X6S-CERM 0201
C78A4 1UF 20% 6.3V X6S-CERM 0201
C78A5 1UF 6.3V X6S-CERM 0201
PLACE_SIDE=BOTTOM
C78A6 1UF 20% 6.3V X6S-CERM 0201
C78A7 1UF 6.3V X6S-CERM
C78A8 1UF 20% 6.3V X6S-CERM 0201
C78A9 1UF 6.3V X6S-CERM 0201
C78B0 1UF 20% 6.3V X6S-CERM 0201
C78B1 1UF 6.3V X6S-CERM 0201
C78E1 1UF 20% 6.3V X6S-CERM
C78E3 1UF 6.3V X6S-CERM 0201
C78E4 1UF 6.3V X6S-CERM
PLACE_SIDE=BOTTOM
C78C2 1UF 20% 6.3V X6S-CERM 0201
C78C3 1UF 6.3V X6S-CERM 0201
C78C4 1UF 20% 6.3V X6S-CERM 0201
C78C5 1UF 6.3V X6S-CERM 0201
C78C6 1UF 20% 6.3V X6S-CERM 0201
C78C7 1UF 6.3V X6S-CERM 0201
C78C8 1UF 20% 6.3V X6S-CERM 0201
C78C9 1UF 6.3V X6S-CERM 0201
C78CB 1UF 20% 6.3V X6S-CERM 0201
C78CC 1UF 6.3V X6S-CERM 0201
PLACE_SIDE=BOTTOM PLACE_SIDE=BOTTOM PLACE_SIDE=BOTTOM PLACE_SIDE=BOTTOM PLACE_SIDE=BOTTOM

VOUT = 0.7-1 V
IOUT_MAX = 4 A
F = 3MHz
PPVPCORE_S5

C7860 20UF 20% 2.5V X6S-CERM 0402
C7861 20UF 2.5V X6S-CERM 0402
C7862 20UF 20% 2.5V X6S-CERM 0402
C7863 20UF 2.5V X6S-CERM 0402
C7864 20UF 20% 2.5V X6S-CERM 0402
C7865 20UF 2.5V X6S-CERM 0402
C7889 20UF 20% 2.5V X6S-CERM 0402
C7890 20UF 2.5V X6S-CERM 0402
C7866 20UF 20% 2.5V X6S-CERM 0402
C7867 20UF 2.5V X6S-CERM 0402
C7868 20UF 20% 2.5V X6S-CERM 0402
C7869 20UF 2.5V X6S-CERM 0402
C7870 20UF 20% 2.5V X6S-CERM 0402
C7871 20UF 2.5V X6S-CERM 0402

CRITICAL
0.47UH-20%-4.8A-0.0340HM
L7819 0806-COMBO PVPCORES5_SW0
MIN_LINE_WIDTH=0.6000
MIN_NECK_WIDTH=0.1000
SWITCH_NODE=TRUE
DIDT=TRUE
NC

CRITICAL
0.47UH-20%-4.8A-0.0340HM
L7820 0806-COMBO PVPCORES5_SW1
MIN_LINE_WIDTH=0.6000
MIN_NECK_WIDTH=0.1000
SWITCH_NODE=TRUE
DIDT=TRUE
PLACE_NEAR=L7819.1:6MM
NOSTUFF
R7819 0201 5% MF 1/20W 1PVPCORES5_FB_P
PLACE_NEAR=U7800.G15:6MM
NOSTUFF
R7821 0201 5% MF 1/20W PVPCORES5_FB_N

VOUT = 1.05 V
IOUT_MAX = 6 A
F = 3MHz
PP1V_PRIM

C78D0 20UF 20% 2.5V X6S-CERM 0402
C78D1 20UF 2.5V X6S-CERM 0402
C78D2 20UF 20% 2.5V X6S-CERM 0402
C78D3 20UF 2.5V X6S-CERM 0402
C78D4 20UF 20% 2.5V X6S-CERM 0402
C78D5 20UF 2.5V X6S-CERM 0402
C7898 20UF 20% 2.5V X6S-CERM 0402
C7872 20UF 2.5V X6S-CERM
C7873 20UF 20% 2.5V X6S-CERM 0402
C7874 20UF 2.5V X6S-CERM
C7875 20UF 20% 2.5V X6S-CERM 0402
C7876 20UF 2.5V X6S-CERM 0402
C7899 20UF 20% 2.5V X6S-CERM 0402
C7877 20UF 2.5V X6S-CERM 0402
C7878 20UF 20% 2.5V X6S-CERM 0402
C7879 20UF 2.5V X6S-CERM 0402
C7880 20UF 20% 2.5V X6S-CERM 0402
C7881 20UF 2.5V X6S-CERM 0402

CRITICAL
0.47UH-20%-4.8A-0.0340HM
L7821 0806-COMBO P1VPRIM_SW0
MIN_LINE_WIDTH=0.6000
MIN_NECK_WIDTH=0.1000
SWITCH_NODE=TRUE
DIDT=TRUE

CRITICAL
0.47UH-20%-4.8A-0.0340HM
L7822 0806-COMBO P1VPRIM_SW1
MIN_LINE_WIDTH=0.6000
MIN_NECK_WIDTH=0.1000
SWITCH_NODE=TRUE
DIDT=TRUE
PLACE_NEAR=L7822.1:5MM
NOSTUFF
R7820 0201 5% MF 1/20W P1VPRIM_FB

VOUT = 0.9 V
IOUT_MAX = 3 A
F = 3MHz
PP0V9_SSD0
R7823 should be stuffed when Buck9 is unused

C7882 20UF 20% 2.5V X6S-CERM 0402
C7883 20UF 2.5V X6S-CERM 0402
C7884 20UF 20% 2.5V X6S-CERM 0402
C7885 20UF 2.5V X6S-CERM 0402
C7886 20UF 20% 2.5V X6S-CERM 0402
C7887 20UF 2.5V X6S-CERM 0402
SSD:2L

CRITICAL
0.47UH-20%-4.8A-0.0340HM
L7823 0806-COMBO P0V9SSD_SW0
MIN_LINE_WIDTH=0.6000
MIN_NECK_WIDTH=0.1000
DIDT=TRUE
SWITCH_NODE=TRUE
PLACE_NEAR=L7823.1:10MM
R7822 0201 5% MF 1/20W P0V9SSD_FB_P
NO_TEST=1
PLACE_NEAR=U7800.N14:10MM
R7823 0201 5% MF 1/20W P0V9SSD_FB_N
NO_TEST=1

VOUT = 1.2/1.8 V
IOUT_MAX = 3 A
F = 3MHz
PPVCCO_ANI_SSD0

C78B2 20UF 20% 2.5V X6S-CERM 0402
C78B3 20UF 2.5V X6S-CERM 0402
C78B4 20UF 20% 2.5V X6S-CERM 0402
C78B5 20UF 2.5V X6S-CERM 0402
C78B6 20UF 20% 2.5V X6S-CERM6S-CERM 0402
C78B7 20UF 2.5V 0402
C78B8 20UF 20% 2.5V X6S-CERM6S-CERM 0402
C78B9 20UF 2.5V 0402
C78C0 20UF 20% 2.5V X6S-CERM 0402
C78C1 20UF 2.5V X6S-CERM 0402
SSD:2L

CRITICAL
0.47UH-20%-4.8A-0.0340HM
L7824 0806-COMBO PVCCOSSD_SW0
MIN_LINE_WIDTH=0.6000
MIN_NECK_WIDTH=0.1000
DIDT=TRUE
SWITCH_NODE=TRUE
PLACE_NEAR=L7824.1:5MM
R7824 0201 5% MF 1/20W PVCCOSSD_FB

CRITICAL
1UH-20%-3.8A-0.055OHM
L7806 2016-COMBO PVDDCPUAWAKE_SW0
SWITCH_NODE=TRUE
MIN_LINE_WIDTH=0.2000
MIN_NECK_WIDTH=0.1750
DIDT=TRUE

CRITICAL
0.22UH-20%-6.7A-0.023OHM
L7807 PINA20121T-SM PVDDCPUAWAKE_SW1
SWITCH_NODE=TRUE
MIN_LINE_WIDTH=0.2000
MIN_NECK_WIDTH=0.1750
DIDT=TRUE

CRITICAL
0.22UH-20%-6.7A-0.023OHM
L7808 PINA20121T-SM PVDDCPUAWAKE_SW2
SWITCH_NODE=TRUE
MIN_LINE_WIDTH=0.2000
MIN_NECK_WIDTH=0.1750
DIDT=TRUE

CRITICAL
0.22UH-20%-6.7A-0.023OHM
L7809 PINA20121T-SM PVDDCPUAWAKE_SW3
SWITCH_NODE=TRUE
MIN_LINE_WIDTH=0.2000
MIN_NECK_WIDTH=0.1750
DIDT=TRUE
PLACE_NEAR=L7806.2:5MM
R7806 0201 5% MF 1/20W PVDDCPUAWAKE_FB

CRITICAL
1.0UH-20%-2.6A-0.0950HM
L7810 0805-COMBO PVDDCPUSRAMAWAKE_SW0
SWITCH_NODE=TRUE
MIN_LINE_WIDTH=0.2000
MIN_NECK_WIDTH=0.1750
DIDT=TRUE
PLACE_NEAR=L7810.2:5MM
R7811 0201 5% MF 1/20W PVDDCPUSRAMAWAKE_FB

CRITICAL
1UH-20%-4.7A-0.040HM
L7811 2520 P0V8SLPDDR_SW0
SWITCH_NODE=TRUE
MIN_LINE_WIDTH=0.2000
MIN_NECK_WIDTH=0.1750
DIDT=TRUE

CRITICAL
0.47UH-20%-4.8A-0.034OHM
L7812 0806-COMBO P0V8SLPDDR_SW1
SWITCH_NODE=TRUE
MIN_LINE_WIDTH=0.2000
MIN_NECK_WIDTH=0.1750
DIDT=TRUE
PLACE_NEAR=L7812.2:5MM
NOSTUFF
R7812 0201 5% MF 1/20W P0V8SLPDDR_FB

CRITICAL
1UH-20%-3.8A-0.055OHM
L7813 2016-COMBO P1V8SLPS2R_SW0
SWITCH_NODE=TRUE
MIN_LINE_WIDTH=0.2000
MIN_NECK_WIDTH=0.1750
DIDT=TRUE
PLACE_NEAR=L7813.2:5MM
R7813 0201 5% MF 1/20W P1V8SLPS2R_FB

PP1V8_SLPS2R

CRITICAL
1UH-20%-3.8A-0.055OHM
L7814 2016-COMBO P1V1SLPS2R_SW0
SWITCH_NODE=TRUE
MIN_LINE_WIDTH=0.2000
MIN_NECK_WIDTH=0.1750
DIDT=TRUE

CRITICAL
0.47UH-20%-4.8A-0.034OHM
L7815 0806-COMBO P1V1SLPS2R_SW1
SWITCH_NODE=TRUE
MIN_LINE_WIDTH=0.2000
MIN_NECK_WIDTH=0.1750
DIDT=TRUE
PLACE_NEAR=L7815.2:5MM
R7814 0201 5% MF 1/20W P1V1SLPS2R_FB

CRITICAL
L7816 2016-COMBO P0V9SLPDDR_SW0
SWITCH_NODE=TRUE
MIN_LINE_WIDTH=0.1750
MIN_NECK_WIDTH=0.2000
DIDT=TRUE

CRITICAL
1UH-20%-3.8A-0.055OHM
0.47UH-20%-4.8A-0.034OHM
L7817 0806-COMBO P0V9SLPDDR_SW1
SWITCH_NODE=TRUE
MIN_LINE_WIDTH=0.1750
MIN_NECK_WIDTH=0.2000
DIDT=TRUE
PLACE_NEAR=L7816.2:5MM
R7816 0201 5% MF 1/20W P0V9SLPDDR_FB
NOSTUFF

Vout = 0.625V - 1.06V
Iout_Max = 13.4A
F = 2MHz & 4MHz
PPVDDCPU_AWAKE

C7811 20UF 20% 2.5V X6S-CERM 0402
C7812 20UF 2.5V X6S-CERM
C7813 20UF 20% 2.5V X6S-CERM 0402
C7821 20UF 2.5V X6S-CERM
C7822 20UF 20% 2.5V X6S-CERM 0402
C7823 20UF 20% 2.5V 0402
C7824 20UF 20% 2.5V X6S-CERM 0402
C7825 20UF 2.5V X6S-CERM 0402
C7826 20UF 20% 2.5V X6S-CERM 0402
C7827 20UF 2.5V X6S-CERM 0402
C7828 20UF 20% 2.5V X6S-CERM 0402

Vout = 0.8V - 1.06V
Iout_Max = 1A
F = 3MHz
PPVDDCPUSRAM_AWAKE

C7829 10UF 20% 4V X6S 0402-1
C7830 10UF 20% 4V X6S 0402-1

Vout = 0.82V
Iout_Max = 6A
F = 3MHz
PP0V82_SLPDDR

C7833 20UF 20% 2.5V X6S-CERM 0402
C7834 20UF 2.5V X6S-CERM 0402
C7835 20UF 20% 2.5V X6S-CERM 0402
C7836 20UF 2.5V X6S-CERM 0402
C7837 20UF 20% 2.5V X6S-CERM 0402
C7838 20UF 2.5V X6S-CERM 0402
C7814 20UF 20% 2.5V X6S-CERM 0402
C7815 20UF 2.5V X6S-CERM
C7831 20UF 20% 2.5V X6S-CERM 0402
C7832 20UF 2.5V X6S-CERM

Vout = 1.8V
Iout_Max = 2.5A
F = 3MHz
PP1V8_SLPS2R

C7839 20UF 20% 2.5V X6S-CERM 0402
C7840 20UF 2.5V X6S-CERM 0402
C7841 20UF 20% 2.5V X6S-CERM 0402
C7842 20UF 2.5V X6S-CERM 0402
C7843 20UF 20% 2.5V X6S-CERM 0402
C7844 20UF 2.5V X6S-CERM 0402
C7845 20UF 20% 2.5V X6S-CERM 0402

Vout = 1.1V
Iout_Max = 4A
F = 3MHz
PP1V1_SLPS2R

C7846 20UF 20% 2.5V X6S-CERM6S-CERM 0402
C7847 20UF 2.5V 0402
C7848 20UF 20% 2.5V X6S-CERM6S-CERM 0402
C7849 20UF 2.5V 0402
C7850 20UF 20% 2.5V X6S-CERM 0402
C7851 20UF 2.5V X6S-CERM 0402
C7816 20UF 20% 2.5V X6S-CERM 0402
C7817 20UF 2.5V X6S-CERM 0402

Vout = 0.9V
Iout_Max = 4A
F = 3MHz
PP0V9_SLPDDR

C7852 20UF 20% 2.5V X6S-CERM 0402
C7853 20UF 2.5V X6S-CERM 0402
C7854 20UF 20% 2.5V X6S-CERM 0402
C7855 20UF 2.5V X6S-CERM 0402
C7856 20UF 20% 2.5V X6S-CERM 0402
C7857 20UF 2.5V X6S-CERM 0402
C7818 20UF 20% 2.5V X6S-CERM 0402
C7819 20UF 2.5V X6S-CERM 0402

Supplied Current

BUCK3_SW1	PP1V8_AWAKE	0.3A
BUCK3_SW2	PP1V8_SLPS2R_PMUVDDGPIO	0.3A
BUCK3_SW3_0	PP1V8_S5	1.0A
BUCK3_SW3_1		
BUCK3_SW4_0	PP1V8_S3	1.0A
BUCK3_SW4_1		
BUCK3_SW5	PP1V8_IO_SSD0_R	0.5A
BUCK4_SW1	NC	0.5A
BUCK6_SW1	NC	0.3A
BUCK8_SW1	NC_PPBUCK8_SW1	0.3A
BUCK8_SW2	PP1V_S3	0.3A

BOM_COST_GROUP=PLATFORM POWER

PAGE TITLE
PMIC BUCKS AND SWS

Apple Inc.

DRAWING NUMBER 051-04273
SIZE D
REVISION 4.0.0
BRANCH evt-1
PAGE 78 OF 500
SHEET 70 OF 98

NOTICE OF PROPRIETARY PROPERTY:
THE INFORMATION CONTAINED HEREIN IS THE PROPRIETARY PROPERTY OF APPLE INC.
THE POSESSOR AGREES TO THE FOLLOWING:
I TO MAINTAIN THIS DOCUMENT IN CONFIDENCE
II NOT TO REPRODUCE OR COPY IT
III NOT TO REVEAL OR PUBLISH IT IN WHOLE OR PART
IV ALL RIGHTS RESERVED

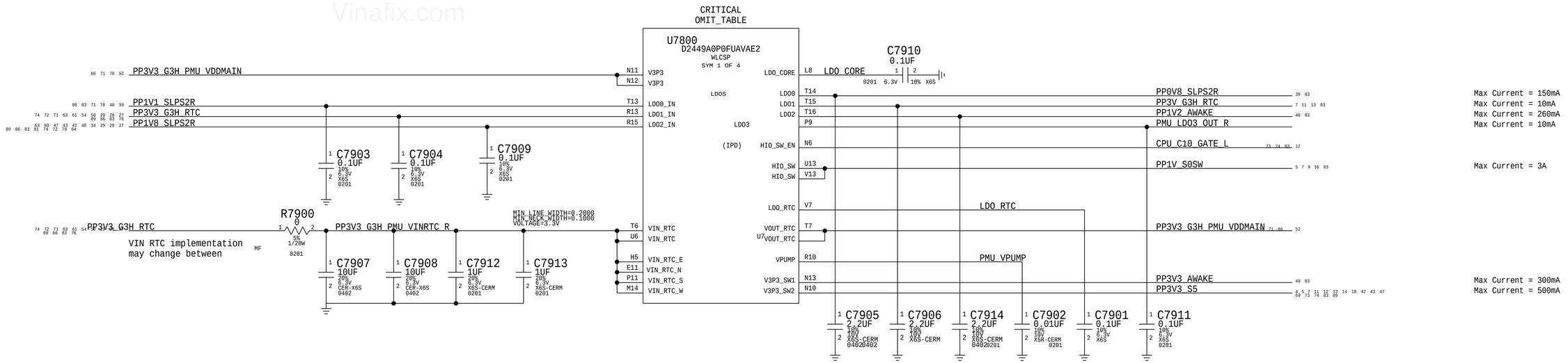

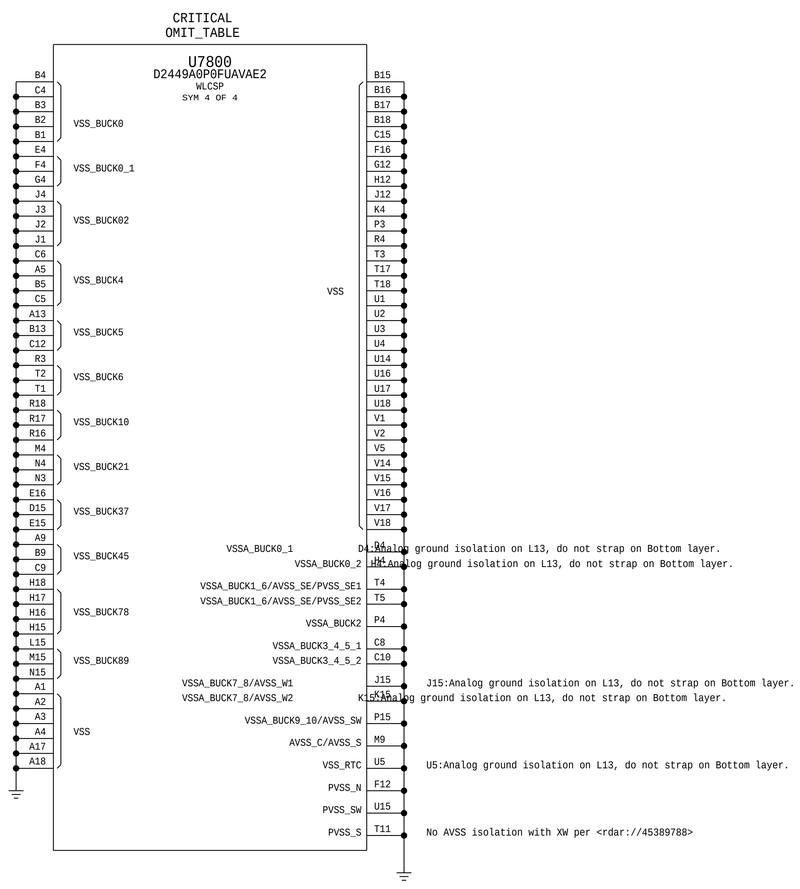

1.1V SLPDDR SWITCH

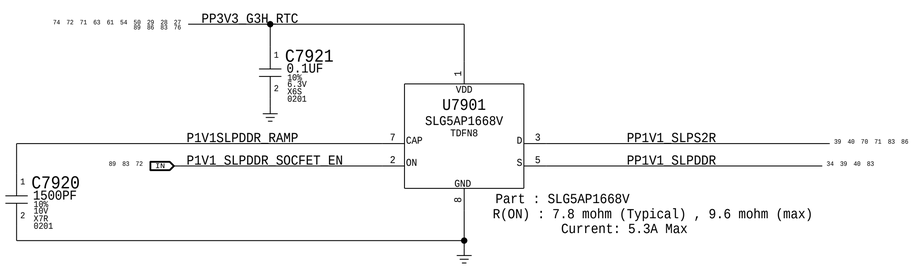

BOM_COST_GROUP=PLATFORM POWER

PAGE TITLE	PMIC LDOS
Apple Inc.	DRAWING NUMBER 051-04273 / SIZE D
	REVISION 4.0.0
	BRANCH evt-1
	PAGE 79 OF 500
	SHEET 71 OF 98

NOTICE OF PROPRIETARY PROPERTY:
THE INFORMATION CONTAINED HEREIN IS THE PROPRIETARY PROPERTY OF APPLE INC.
THE POSESSOR AGREES TO THE FOLLOWING:
I TO MAINTAIN THIS DOCUMENT IN CONFIDENCE
II NOT TO REPRODUCE OR COPY IT
III NOT TO REVEAL OR PUBLISH IT IN WHOLE OR PART
IV ALL RIGHTS RESERVED

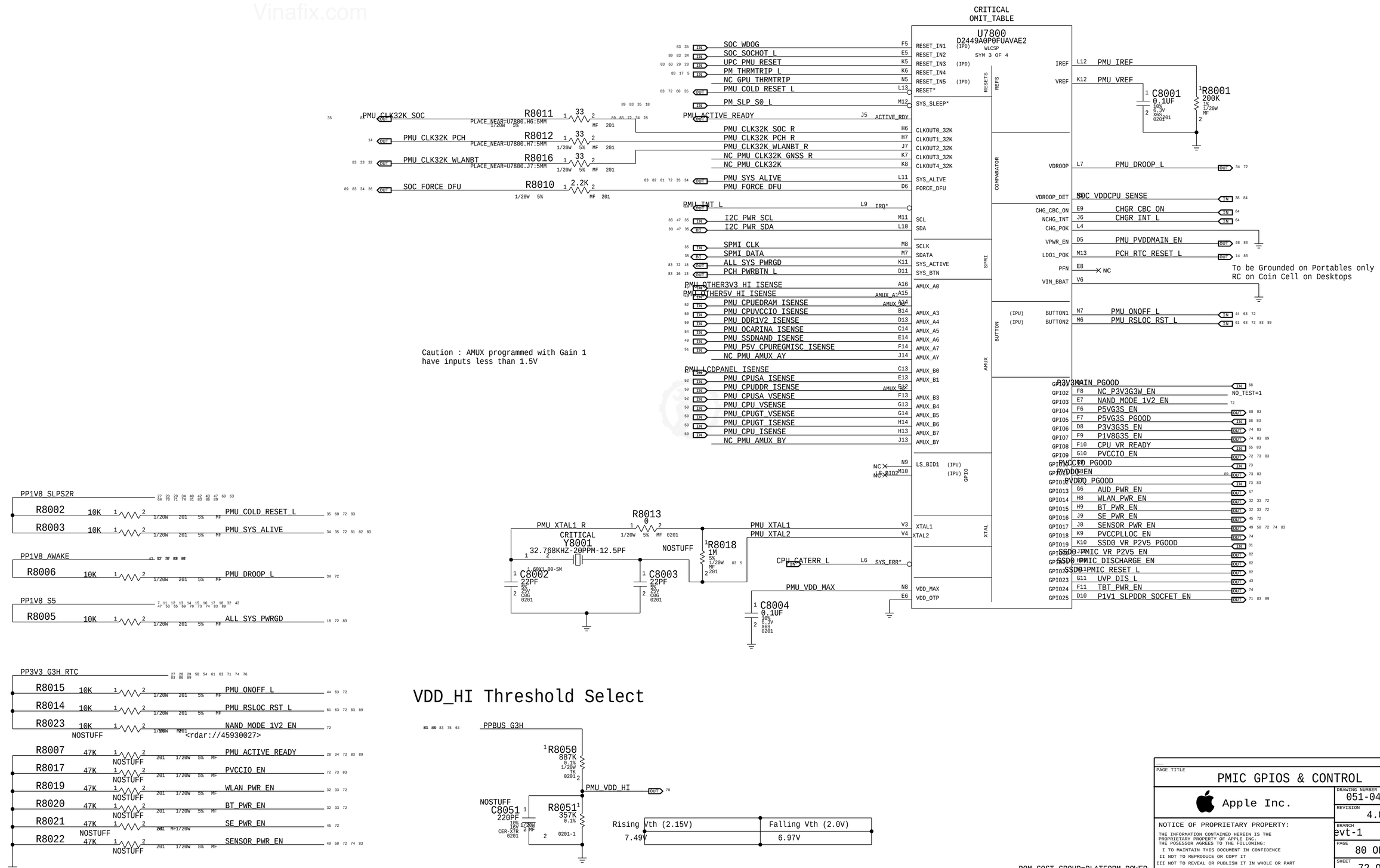
CRITICAL
OMIT_TABLE
U7800
D2449A0P0FUAVAE2
(IPD)
WLCSP
SYM 3 OF 4
RESET_IN1
RESET_IN2
RESET_IN3
RESET_IN4
RESET_IN5
RESET*
SYS_SLEEP*
CLKOUT0_32K
CLKOUT1_32K
CLKOUT2_32K
CLKOUT3_32K
CLKOUT4_32K
SYS_ALIVE
FORCE_DFU
SCL
SDA
SCLK
SDATA
SYS_ACTIVE
SYS_BTN
AMUX_A0
AMUX_A3
AMUX_A4
AMUX_A5
AMUX_A6
AMUX_A7
AMUX_AY
AMUX_B0
AMUX_B1
AMUX_B3
AMUX_B4
AMUX_B5
AMUX_B6
AMUX_B7
AMUX_BY
LS_BID1
LS_BID2
XTAL1
XTAL2
VDD_MAX
VDD_OTP
RESETS
REFS
COMPARATOR
SPMI
BUTTON
AMUX
GPIO
XTAL
SOC_WDOG
SOC_SOCHOT_L
UPC_PMU_RESET
PM_THRMTRIP_L
NC_GPU_THRMTRIP
PMU_COLD_RESET_L
PM_SLP_S0_L
PMU_ACTIVE_READY
PMU_CLK32K_SOC_R
PMU_CLK32K_PCH_R
PMU_CLK32K_WLANBT_R
NC_PMU_CLK32K_GNSS_R
NC_PMU_CLK32K
PMU_SYS_ALIVE
PMU_FORCE_DFU
PMU_INT_L
I2C_PWR_SCL
I2C_PWR_SDA
SPMI_CLK
SPMI_DATA
ALL_SYS_PWRGD
PCH_PWRBTN_L
PMU_OTHER3V3_HI_ISENSE
PMU_OTHER5V_HI_ISENSE
PMU_CPUEDRAM_ISENSE
PMU_CPUVCCIO_ISENSE
PMU_DDR1V2_ISENSE
PMU_OCARINA_ISENSE
PMU_SSDNAND_ISENSE
PMU_P5V_CPUREGMISC_ISENSE
NC_PMU_AMUX_AY
PMU_LCDPANEL_ISENSE
PMU_CPUSA_ISENSE
PMU_CPUDDR_ISENSE
PMU_CPUSA_VSENSE
PMU_CPU_VSENSE
PMU_CPUGT_VSENSE
PMU_CPUGT_ISENSE
PMU_CPU_ISENSE
NC_PMU_AMUX_BY
PMU_CLK32K_SOC
PMU_CLK32K_PCH
PMU_CLK32K_WLANBT
SOC_FORCE_DFU
R8011 33
R8012 33
R8016 33
R8010 2.2K
PLACE_NEAR=U7800.H6:5MM
PLACE_NEAR=U7800.H7:5MM
PLACE_NEAR=U7800.J7:5MM
Caution : AMUX programmed with Gain 1
have inputs less than 1.5V
IREF
VREF
VDROOP
VDROOP_DET
CHG_CBC_ON
NCHG_INT
CHG_POK
VPWR_EN
LDO1_POK
PFN
VIN_BBAT
BUTTON1
BUTTON2
PMU_IREF
PMU_VREF
C8001 0.1UF
R8001 200K
PMU_DROOP_L
SOC_VDDCPU_SENSE
CHGR_CBC_ON
CHGR_INT_L
PMU_PVDDMAIN_EN
PCH_RTC_RESET_L
NC
To be Grounded on Portables only
RC on Coin Cell on Desktops
PMU_ONOFF_L
PMU_RSLOC_RST_L
P3V3MAIN_PGOOD
NC_P3V3G3W_EN
NAND_MODE_1V2_EN
P5VG3S_EN
P5VG3S_PGOOD
P3V3G3S_EN
P1V8G3S_EN
CPU_VR_READY
PVCCIO_EN
PVCCIO_PGOOD
PVDDQ_EN
PVDDQ_PGOOD
AUD_PWR_EN
WLAN_PWR_EN
BT_PWR_EN
SE_PWR_EN
SENSOR_PWR_EN
PVCCPLLOC_EN
SSD0_VR_P2V5_PGOOD
SSD0_PMIC_VR_P2V5_EN
SSD0_PMIC_DISCHARGE_EN
SSD0_PMIC_RESET_L
UVP_DIS_L
TBT_PWR_EN
P1V1_SLPDDR_SOCFET_EN
NO_TEST=1
PP1V8_SLPS2R
R8002 10K PMU_COLD_RESET_L
R8003 10K PMU_SYS_ALIVE
PP1V8_AWAKE
R8006 10K PMU_DROOP_L
PP1V8_S5
R8005 10K ALL_SYS_PWRGD
R8013 0
PMU_XTAL1_R
CRITICAL
Y8001
32.768KHZ-20PPM-12.5PF
NOSTUFF
R8018 1M
C8002 22PF
C8003 22PF
PMU_XTAL1
PMU_XTAL2
CPU_CATERR_L
SYS_ERR*
PMU_VDD_MAX
C8004 0.1UF
PP3V3_G3H_RTC
R8015 10K PMU_ONOFF_L
R8014 10K PMU_RSLOC_RST_L
R8023 10K NAND_MODE_1V2_EN
NOSTUFF
<rdar://45930027>
R8007 47K PMU_ACTIVE_READY
R8017 47K PVCCIO_EN
R8019 47K WLAN_PWR_EN
R8020 47K BT_PWR_EN
R8021 47K SE_PWR_EN
R8022 47K SENSOR_PWR_EN
VDD_HI Threshold Select
PPBUS_G3H
R8050 887K
PMU_VDD_HI
NOSTUFF
C8051 220PF
R8051 357K
Rising Vth (2.15V)
Falling Vth (2.0V)
7.49V
6.97V
BOM_COST_GROUP=PLATFORM POWER
PAGE TITLE
PMIC GPIOS & CONTROL
Apple Inc.
DRAWING NUMBER
051-04273
SIZE
D
REVISION
4.0.0
BRANCH
evt-1
PAGE
80 OF 500
SHEET
72 OF 98
NOTICE OF PROPRIETARY PROPERTY:
THE INFORMATION CONTAINED HEREIN IS THE PROPRIETARY PROPERTY OF APPLE INC.
THE POSESSOR AGREES TO THE FOLLOWING:
I TO MAINTAIN THIS DOCUMENT IN CONFIDENCE
II NOT TO REPRODUCE OR COPY IT
III NOT TO REVEAL OR PUBLISH IT IN WHOLE OR PART
IV ALL RIGHTS RESERVED

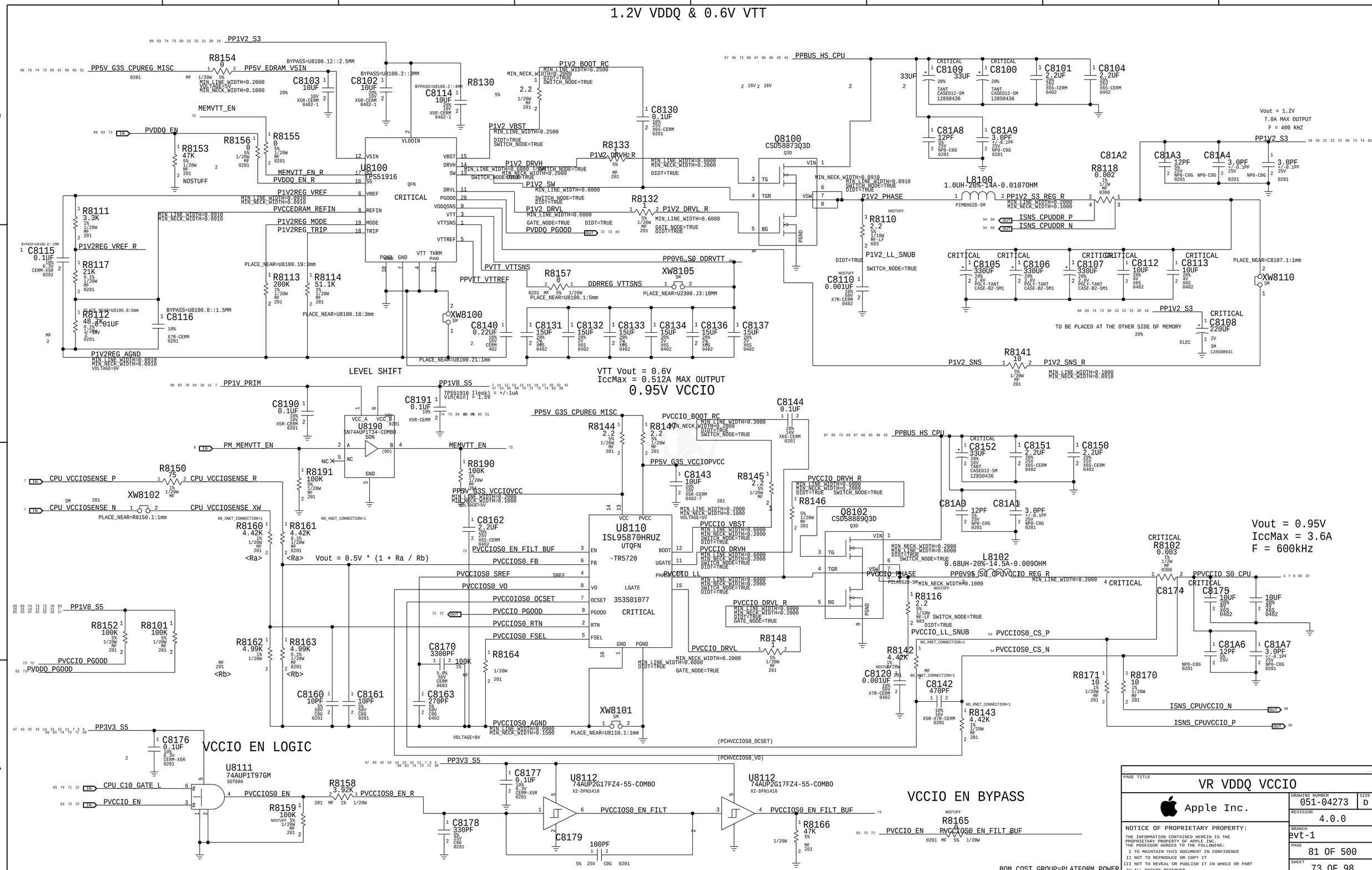

PAGE TITLE

VR VDDQ VCCIO

Apple Inc.

DRAWING NUMBER	051-04273
SIZE	D
REVISION	4.0.0
BRANCH	evt-1
PAGE	81 OF 500
SHEET	73 OF 98

NOTICE OF PROPRIETARY PROPERTY:
THE INFORMATION CONTAINED HEREIN IS THE PROPRIETARY PROPERTY OF APPLE INC.
THE POSESSOR AGREES TO THE FOLLOWING:
I TO MAINTAIN THIS DOCUMENT IN CONFIDENCE
II NOT TO REPRODUCE OR COPY IT
III NOT TO REVEAL OR PUBLISH IT IN WHOLE OR PART
IV ALL RIGHTS RESERVED

3.3V G3 Standby Switch

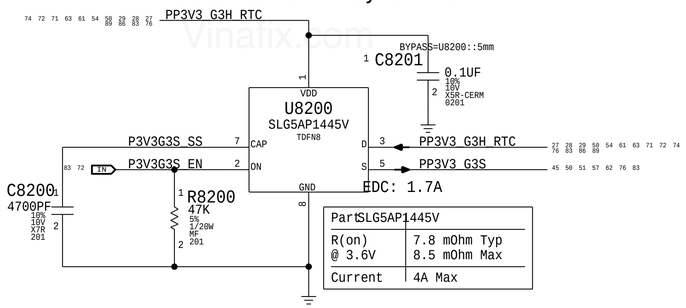

Part	SLG5AP1445V
R(on) @ 3.6V	7.8 mOhm Typ 8.5 mOhm Max
Current	4A Max

1.8V G3 Standby Switch

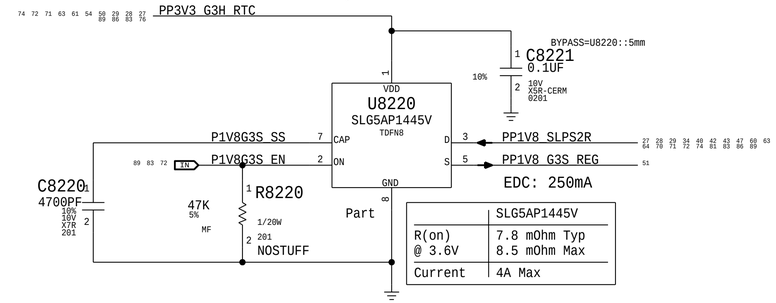

	SLG5AP1445V
R(on) @ 3.6V	7.8 mOhm Typ 8.5 mOhm Max
Current	4A Max

1.2V S0SW VCCPLL_OC Switch

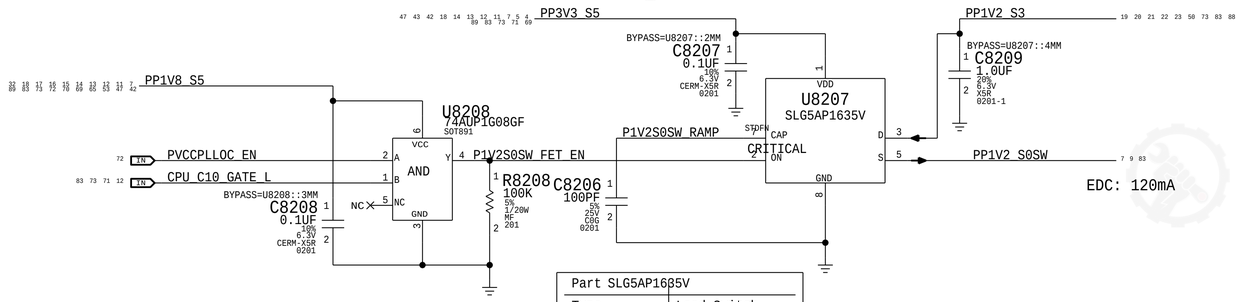

Part	SLG5AP1635V
Type	Load Switch
R(on) @ 3.3V	27.5 mOhm Typ 31 mOhm Max
Current	2.5A Max

VCCPLL_OC has turn-on requirement of
11uS min and 240uS max
from EN to 1.1V

3.3V Sensor Switch

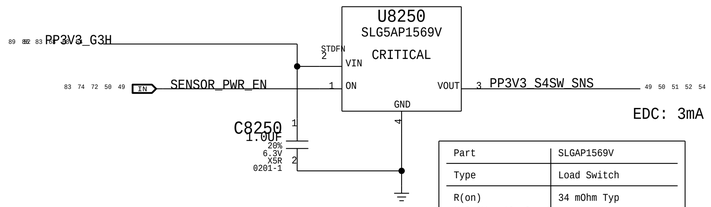

Part	SLGAP1569V
Type	Load Switch
R(on) @ 3.6V 46 mOhm Max	34 mOhm Typ
Current	1A Max

5V Sensor Switch

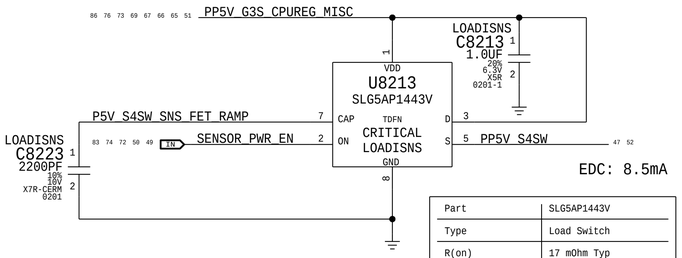

Part	SLG5AP1443V
Type	Load Switch
R(on)	17 mOhm Typ 19 mOhm Max
Current	2.5A

3.3V S0SW TBT X Switch

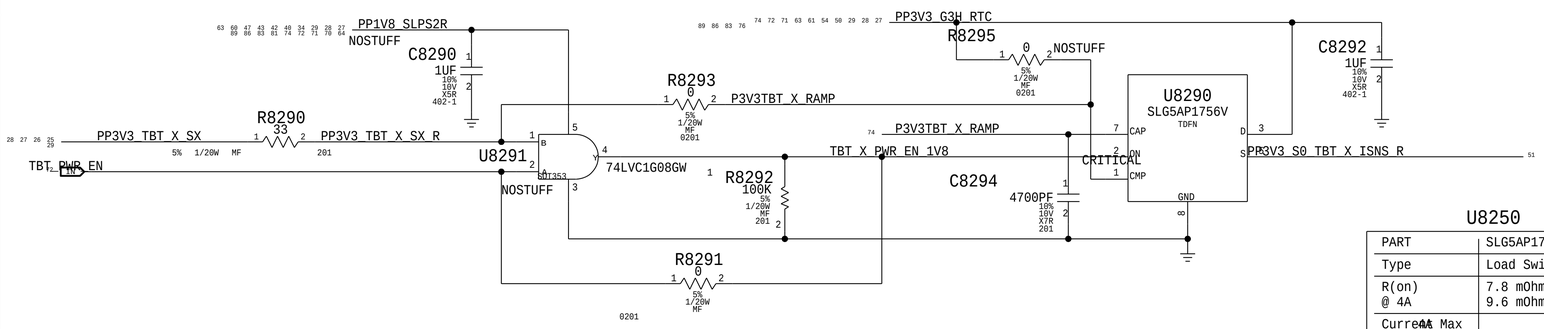

U8250

PART	SLG5AP1756V
Type	Load Switch
R(on) @ 4A	7.8 mOhm Typ 9.6 mOhm Max
Current	4A Max

BOM_COST_GROUP=PLATFORM_POWER

PAGE TITLE
Power FETs

Apple Inc.

NOTICE OF PROPRIETARY PROPERTY:
THE INFORMATION CONTAINED HEREIN IS THE PROPRIETARY PROPERTY OF APPLE INC.
THE POSESSOR AGREES TO THE FOLLOWING:
I TO MAINTAIN THIS DOCUMENT IN CONFIDENCE
II NOT TO REPRODUCE OR COPY IT
III NOT TO REVEAL OR PUBLISH IT IN WHOLE OR PART
IV ALL RIGHTS RESERVED

DRAWING NUMBER	051-04273
SIZE	D
REVISION	4.0.0
BRANCH	evt-1
PAGE	82 OF 500
SHEET	74 OF 98

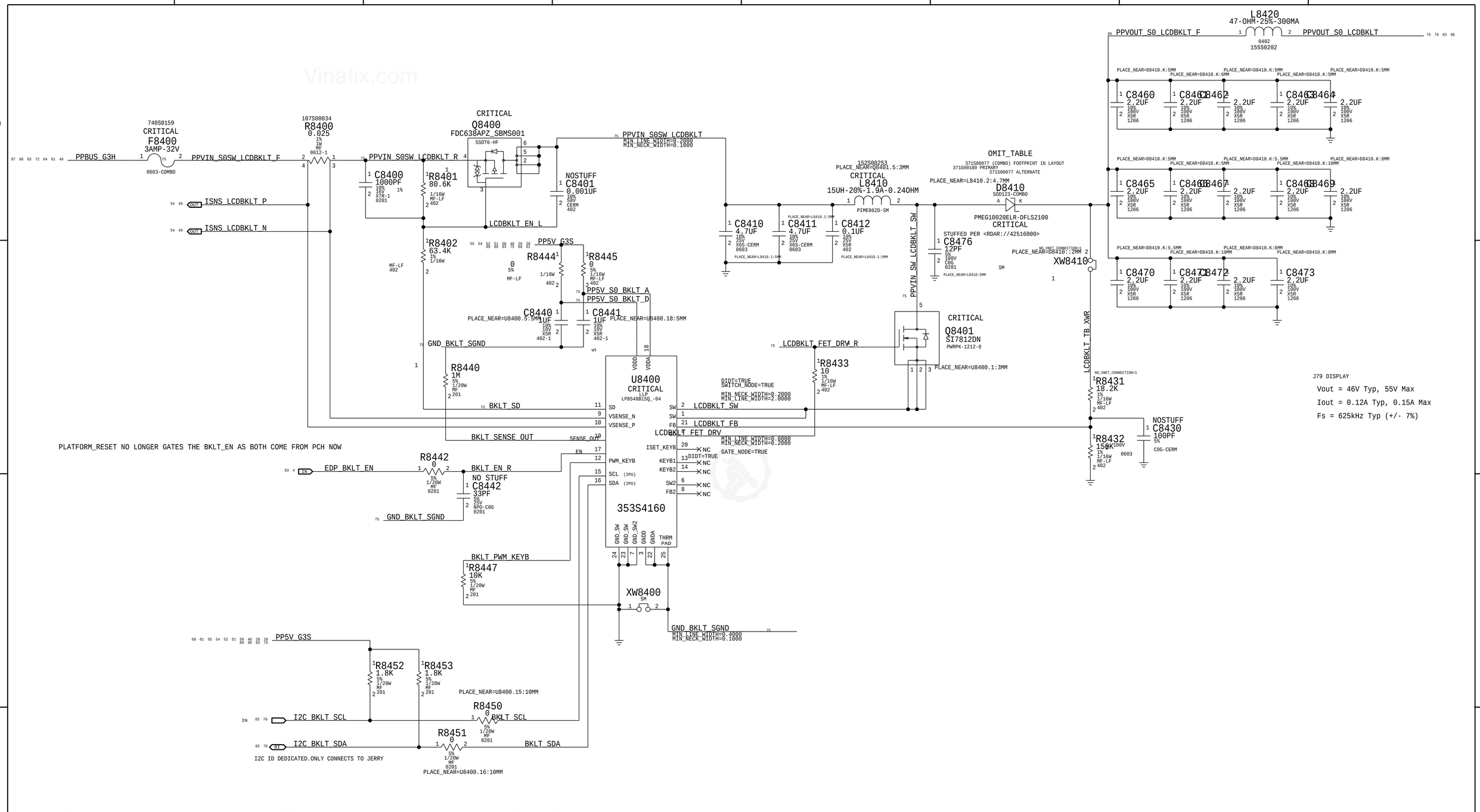

LINE WIDTHS

PP5V_S0_BKLT_A
MIN_LINE_WIDTH=0.2000
MIN_NECK_WIDTH=0.1000

PP5V_S0_BKLT_D
MIN_LINE_WIDTH=0.2000
MIN_NECK_WIDTH=0.1000

BKLT_SD
MIN_LINE_WIDTH=0.2500
MIN_NECK_WIDTH=0.2000

PBUS LINE WIDTHS

PPVIN_S0SW_LCDBKLT_F
MIN_LINE_WIDTH=0.2000
MIN_NECK_WIDTH=0.1000

PPVIN_S0SW_LCDBKLT_R
MIN_LINE_WIDTH=0.2000
MIN_NECK_WIDTH=0.1000

PPVIN_S0SW_LCDBKLT
MIN_LINE_WIDTH=0.2000
MIN_NECK_WIDTH=0.1000

LCD BKLT LINE WIDTHS

LCDBKLT_FET_DRV_R
MIN_LINE_WIDTH=0.6000
MIN_NECK_WIDTH=0.2000
DIDT=TRUE
GATE_NODE=TRUE

PPVIN_SW_LCDBKLT_SW
MIN_LINE_WIDTH=0.2000
MIN_NECK_WIDTH=0.1000
SWITCH_NODE=TRUE
DIDT=TRUE

PPVOUT_S0_LCDBKLT
MIN_LINE_WIDTH=0.2000
MIN_NECK_WIDTH=0.1000

ONLY THE ALTERNATE HAS THE COMBO FOOTPRINT, BOM TABLE NEEDED TO USE ALTERNATE FOOTPRINT
BUT SET PRIMARY APN AS 371S00180

PART#	DESCRIPTION	QTY		REFERENCE DESIGNATOR	CRITICAL		BOM OPTION
371S00180	1	DIODE,SCHOTTKY,100V,2A,SOD123		D8410	CRITICAL		

BOM_COST_GROUP=DISPLAY

SYNC_MASTER=J213_MLB_0P158 SYNC_DATE=05/29/2018

PAGE TITLE
LCD BACKLIGHT DRIVER

Apple Inc.

DRAWING NUMBER 051-04273 SIZE D
REVISION 4.0.0
BRANCH evt-1
PAGE 84 OF 500
SHEET 75 OF 98

NOTICE OF PROPRIETARY PROPERTY:
THE INFORMATION CONTAINED HEREIN IS THE PROPRIETARY PROPERTY OF APPLE INC.
THE POSESSOR AGREES TO THE FOLLOWING:
I TO MAINTAIN THIS DOCUMENT IN CONFIDENCE
II NOT TO REPRODUCE OR COPY IT
III NOT TO REVEAL OR PUBLISH IT IN WHOLE OR PART
IV ALL RIGHTS RESERVED

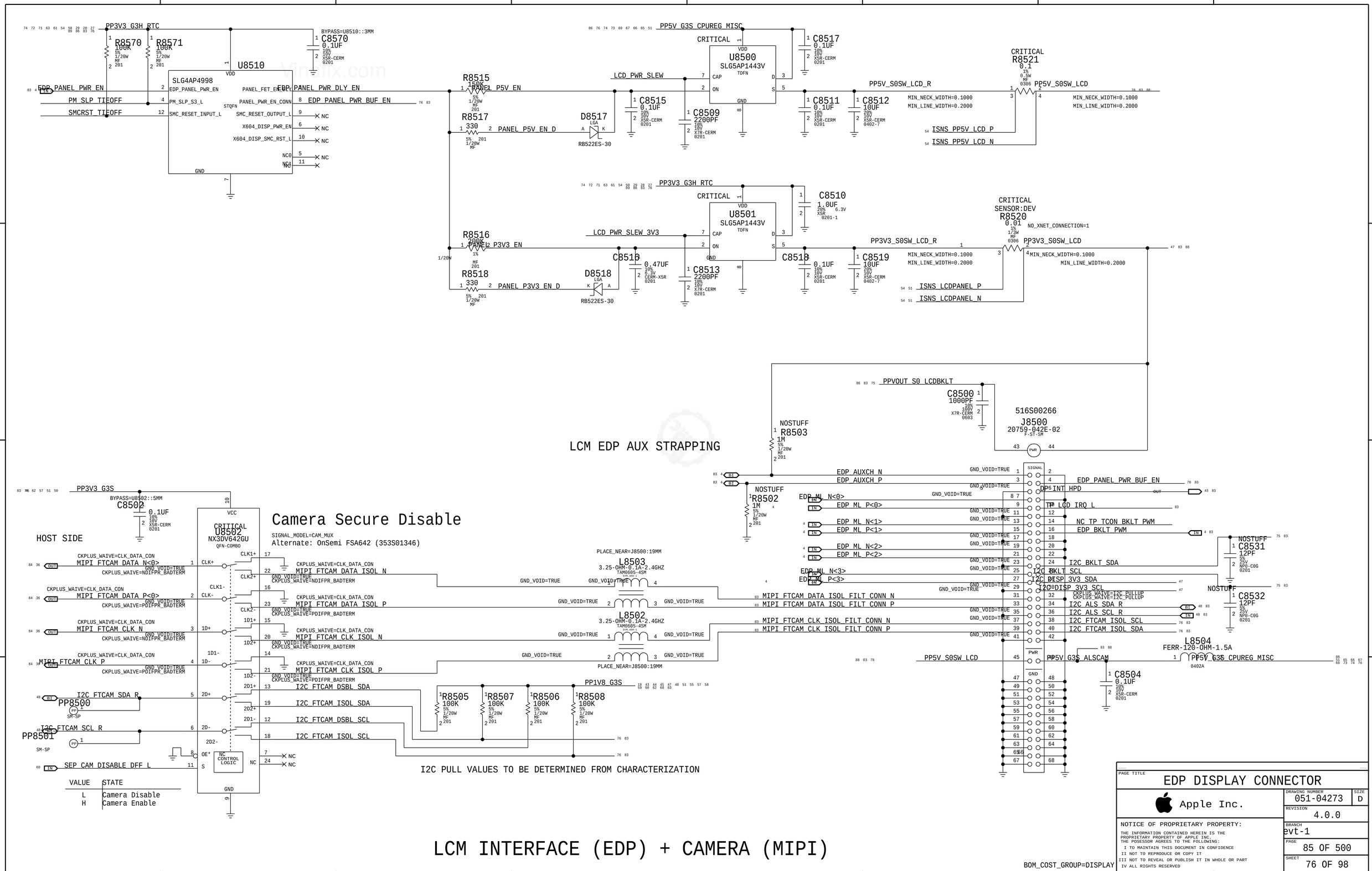
PP3V3_G3H_RTC
R8570 100K
R8571 100K
U8510
SLG4AP4998
EDP_PANEL_PWR_EN
PM_SLP_TIEOFF
SMCRST_TIEOFF
EDP_PANEL_PWR_DLY_EN
EDP_PANEL_PWR_BUF_EN
C8570 0.1UF
PP5V_G3S_CPUREG_MISC
U8500 SLG5AP1443V
C8517 0.1UF
R8515 150K
PANEL_P5V_EN
LCD_PWR_SLEW
C8515 0.1UF
C8509 2200PF
R8517 330
PANEL_P5V_EN_D
D8517
RB522ES-30
C8511 0.1UF
C8512 10UF
PP5V_S0SW_LCD_R
R8521 0.1
PP5V_S0SW_LCD
ISNS_PP5V_LCD_P
ISNS_PP5V_LCD_N
PP3V3_G3H_RTC
U8501 SLG5AP1443V
C8510 1.0UF
R8516 200K
PANEL_P3V3_EN
LCD_PWR_SLEW_3V3
C8516 0.47UF
C8513 2200PF
R8518 330
PANEL_P3V3_EN_D
D8518
RB522ES-30
C8518 0.1UF
C8519 10UF
PP3V3_S0SW_LCD_R
R8520 0.01
PP3V3_S0SW_LCD
ISNS_LCDPANEL_P
ISNS_LCDPANEL_N
PPVOUT_S0_LCDBKLT
C8500 1000PF
516S00266
J8500 20759-042E-02
NOSTUFF R8503 1M
LCM EDP AUX STRAPPING
EDP_AUXCH_N
EDP_AUXCH_P
NOSTUFF R8502 1M
EDP_ML_N<0>
EDP_ML_P<0>
EDP_ML_N<1>
EDP_ML_P<1>
EDP_ML_N<2>
EDP_ML_P<2>
EDP_ML_N<3>
EDP_ML_P<3>
EDP_PANEL_PWR_BUF_EN
DP6_INT_HPD
TP_LCD_IRQ_L
NC_TP_TCON_BKLT_PWM
EDP_BKLT_PWM
I2C_BKLT_SDA
I2C_BKLT_SCL
I2C_DISP_3V3_SDA
I2C_DISP_3V3_SCL
I2C_ALS_SDA_R
I2C_ALS_SCL_R
I2C_FTCAM_ISOL_SCL
I2C_FTCAM_ISOL_SDA
NOSTUFF C8531 12PF
NOSTUFF C8532 12PF
L8504 FERR-120-OHM-1.5A
PP5V_G3S_ALSCAM
PP5V_G3S_CPUREG_MISC
C8504 0.1UF
PP5V_S0SW_LCD
PP3V3_G3S
C8502 0.1UF
U8502 NX3DV642GU
Camera Secure Disable
SIGNAL_MODEL=CAM_MUX
Alternate: OnSemi FSA642 (353S01346)
HOST SIDE
MIPI_FTCAM_DATA_N<0>
MIPI_FTCAM_DATA_P<0>
MIPI_FTCAM_CLK_N
MIPI_FTCAM_CLK_P
I2C_FTCAM_SDA_R
I2C_FTCAM_SCL_R
PP8500
PP8501
SEP_CAM_DISABLE_DFF_L
MIPI_FTCAM_DATA_ISOL_N
MIPI_FTCAM_DATA_ISOL_P
MIPI_FTCAM_CLK_ISOL_N
MIPI_FTCAM_CLK_ISOL_P
I2C_FTCAM_DSBL_SDA
I2C_FTCAM_ISOL_SDA
I2C_FTCAM_DSBL_SCL
I2C_FTCAM_ISOL_SCL
L8503 3.25-OHM-0.1A-2.4GHZ
L8502 3.25-OHM-0.1A-2.4GHZ
PP1V8_G3S
R8505 100K
R8507 100K
R8506 100K
R8508 100K
I2C PULL VALUES TO BE DETERMINED FROM CHARACTERIZATION
VALUE STATE
L Camera Disable
H Camera Enable
LCM INTERFACE (EDP) + CAMERA (MIPI)
BOM_COST_GROUP=DISPLAY
PAGE TITLE
EDP DISPLAY CONNECTOR
Apple Inc.
DRAWING NUMBER 051-04273
SIZE D
REVISION 4.0.0
BRANCH evt-1
PAGE 85 OF 500
SHEET 76 OF 98
NOTICE OF PROPRIETARY PROPERTY:
THE INFORMATION CONTAINED HEREIN IS THE PROPRIETARY PROPERTY OF APPLE INC.
THE POSESSOR AGREES TO THE FOLLOWING:
I TO MAINTAIN THIS DOCUMENT IN CONFIDENCE
II NOT TO REPRODUCE OR COPY IT
III NOT TO REVEAL OR PUBLISH IT IN WHOLE OR PART
IV ALL RIGHTS RESERVED

S4E0

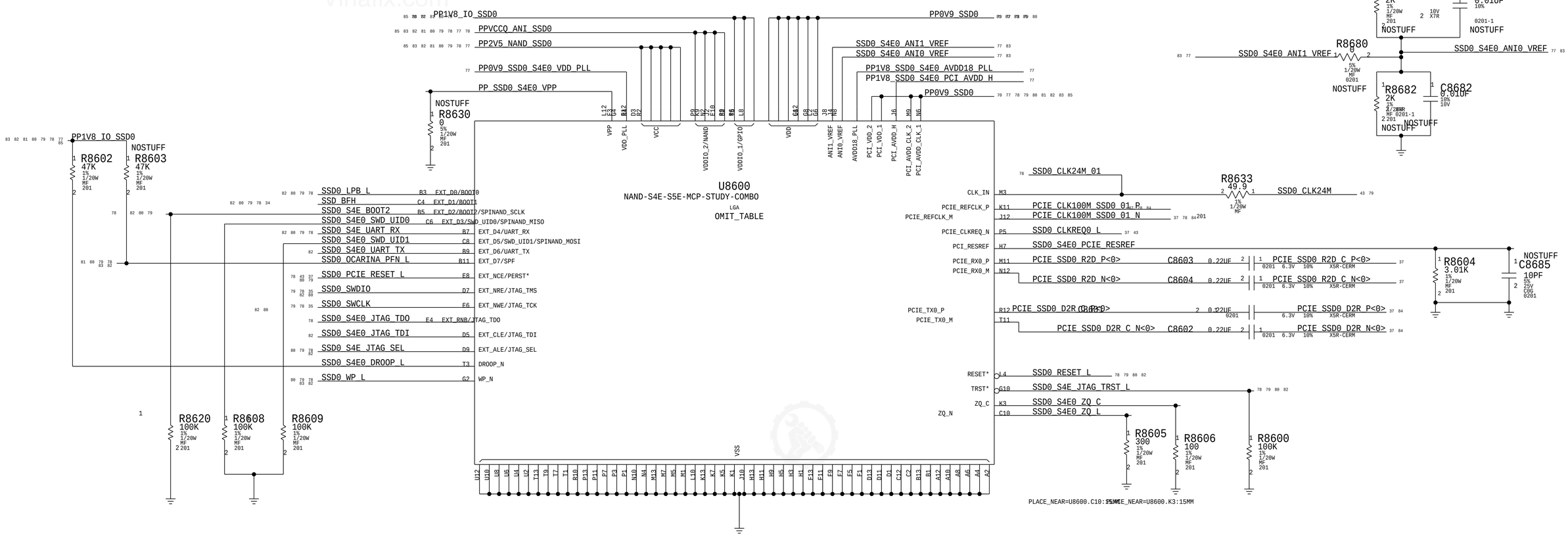

S4E VDD

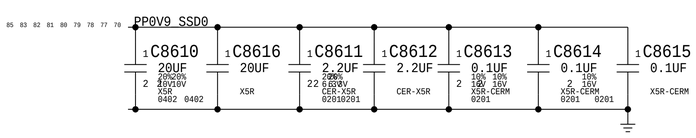

S4E VDDIO_2

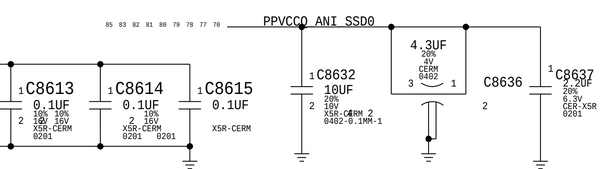

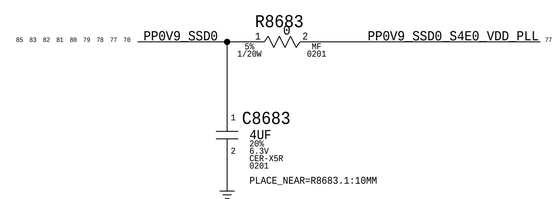

VCC CAP

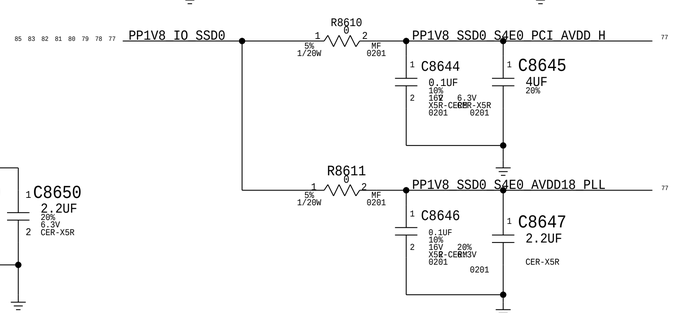

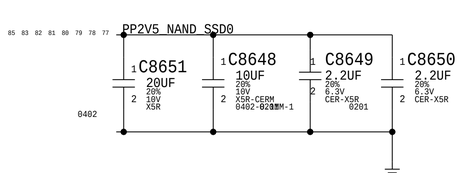

S4E VDDIO_1

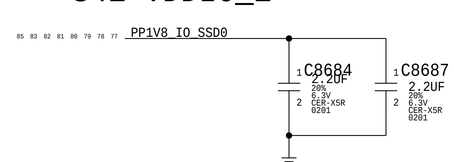

BOM_COST_GROUP=SSD

PAGE TITLE	S4E<0>
	Apple Inc.
DRAWING NUMBER	051-04273
SIZE	D
REVISION	4.0.0
BRANCH	evt-1
PAGE	86 OF 500
SHEET	77 OF 98

NOTICE OF PROPRIETARY PROPERTY:
THE INFORMATION CONTAINED HEREIN IS THE PROPRIETARY PROPERTY OF APPLE INC.
THE POSESSOR AGREES TO THE FOLLOWING:
I TO MAINTAIN THIS DOCUMENT IN CONFIDENCE
II NOT TO REPRODUCE OR COPY IT
III NOT TO REVEAL OR PUBLISH IT IN WHOLE OR PART
IV ALL RIGHTS RESERVED

S4E1

Vinafix.com

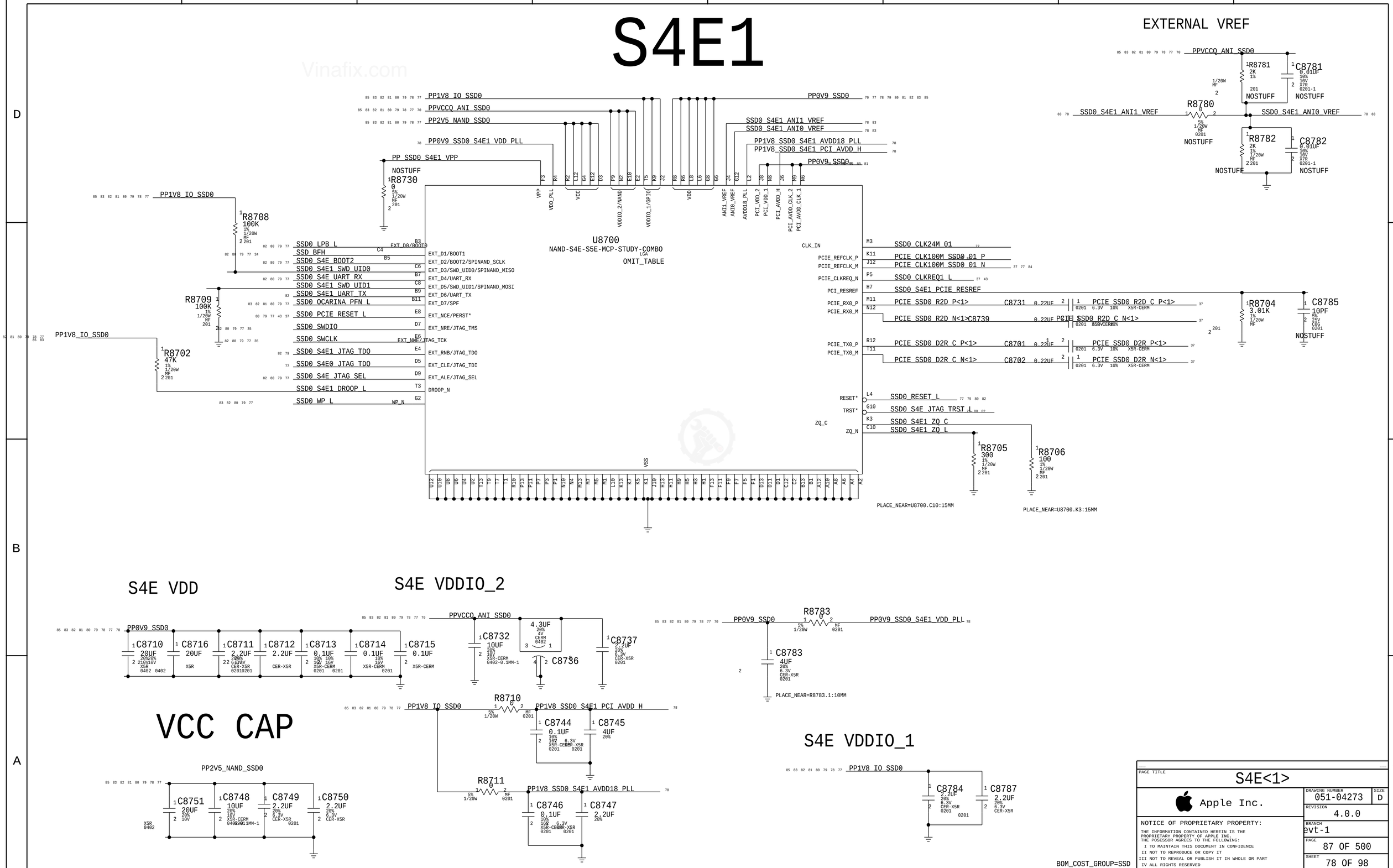

PAGE TITLE
S4E<1>

Apple Inc.

DRAWING NUMBER 051-04273 SIZE D
REVISION 4.0.0
BRANCH evt-1
PAGE 87 OF 500
SHEET 78 OF 98

NOTICE OF PROPRIETARY PROPERTY:
THE INFORMATION CONTAINED HEREIN IS THE PROPRIETARY PROPERTY OF APPLE INC.
THE POSESSOR AGREES TO THE FOLLOWING:
I TO MAINTAIN THIS DOCUMENT IN CONFIDENCE
II NOT TO REPRODUCE OR COPY IT
III NOT TO REVEAL OR PUBLISH IT IN WHOLE OR PART
IV ALL RIGHTS RESERVED

S4E2

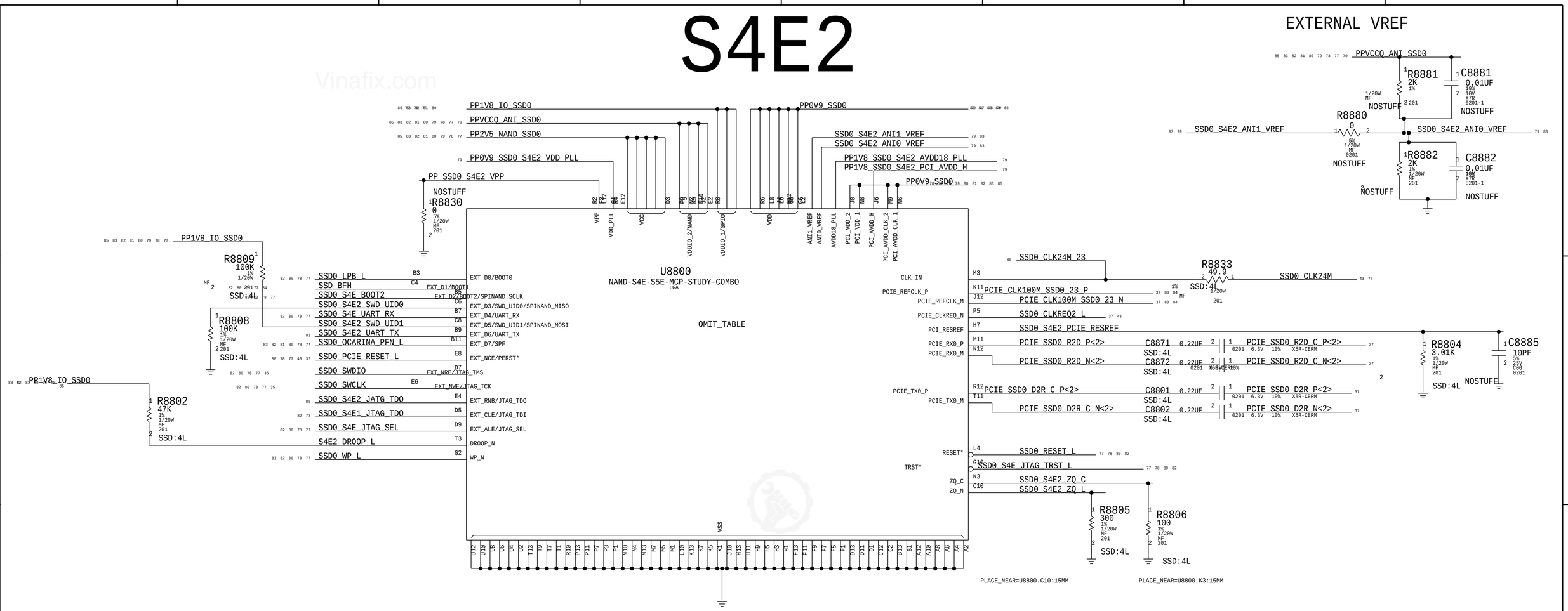

S4E VDD

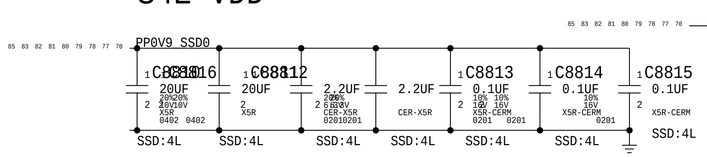

S4E VDDIO_2

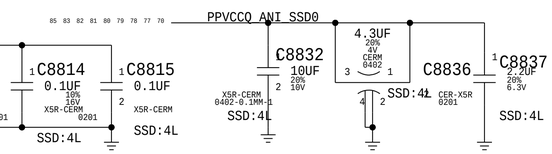

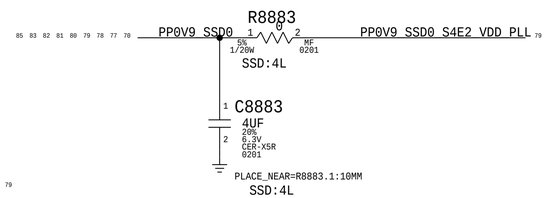

VCC CAP

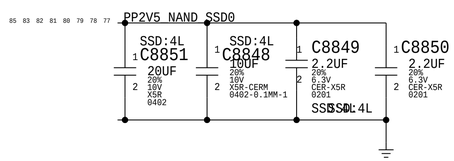

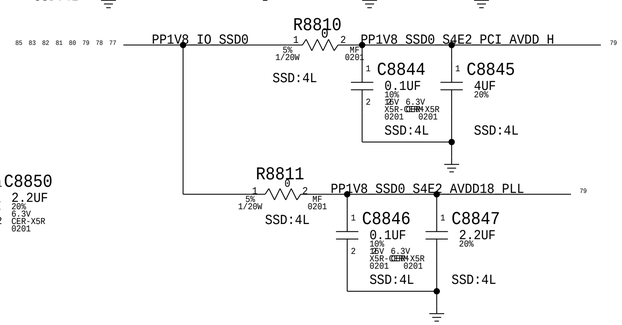

S4E VDDIO_1

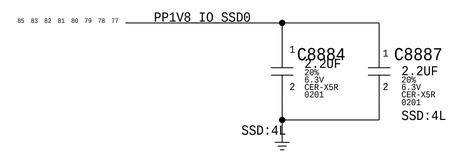

BOM_COST_GROUP=SSD

PAGE TITLE	S4E<2>
Apple Inc.	DRAWING NUMBER 051-04273 SIZE D
	REVISION 4.0.0
	BRANCH evt-1
	PAGE 88 OF 500
	SHEET 79 OF 98

NOTICE OF PROPRIETARY PROPERTY:
THE INFORMATION CONTAINED HEREIN IS THE PROPRIETARY PROPERTY OF APPLE INC.
THE POSESSOR AGREES TO THE FOLLOWING:
I TO MAINTAIN THIS DOCUMENT IN CONFIDENCE
II NOT TO REPRODUCE OR COPY IT
III NOT TO REVEAL OR PUBLISH IT IN WHOLE OR PART
IV ALL RIGHTS RESERVED

S4E3

Vinafix.com

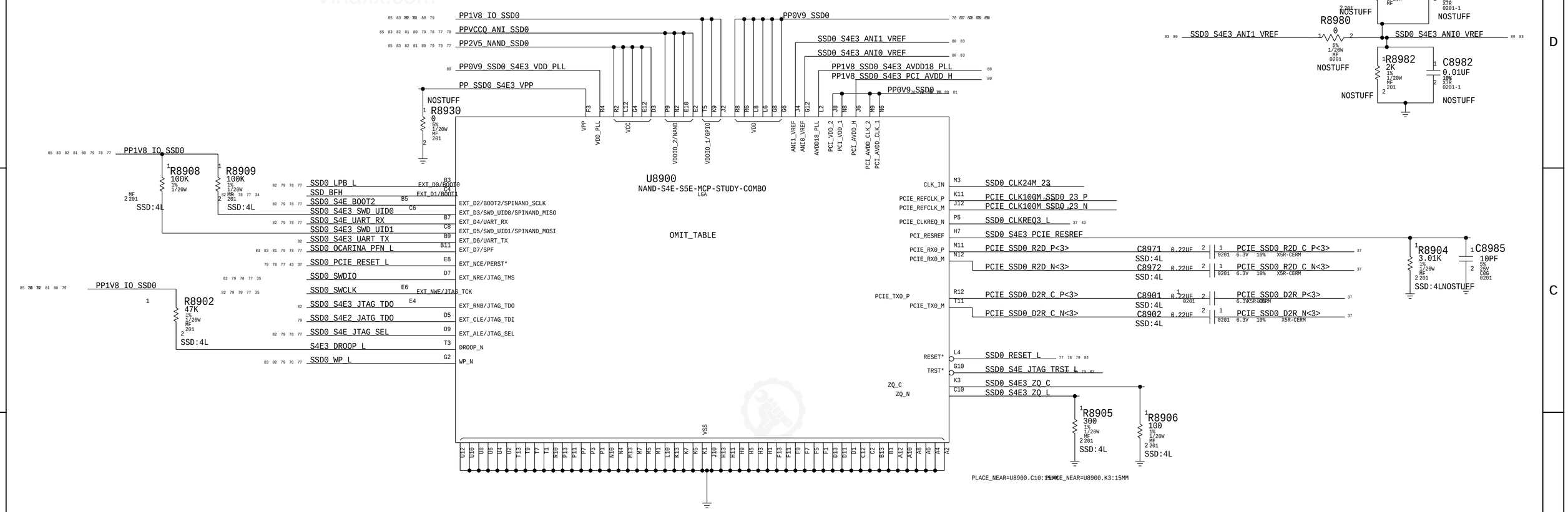

BOM_COST_GROUP=SSD

PAGE TITLE	S4E<3>
	Apple Inc.
DRAWING NUMBER	051-04273
SIZE	D
REVISION	4.0.0
BRANCH	evt-1
PAGE	89 OF 500
SHEET	80 OF 98

NOTICE OF PROPRIETARY PROPERTY:
THE INFORMATION CONTAINED HEREIN IS THE PROPRIETARY PROPERTY OF APPLE INC.
THE POSESSOR AGREES TO THE FOLLOWING:
I TO MAINTAIN THIS DOCUMENT IN CONFIDENCE
II NOT TO REPRODUCE OR COPY IT
III NOT TO REVEAL OR PUBLISH IT IN WHOLE OR PART
IV ALL RIGHTS RESERVED

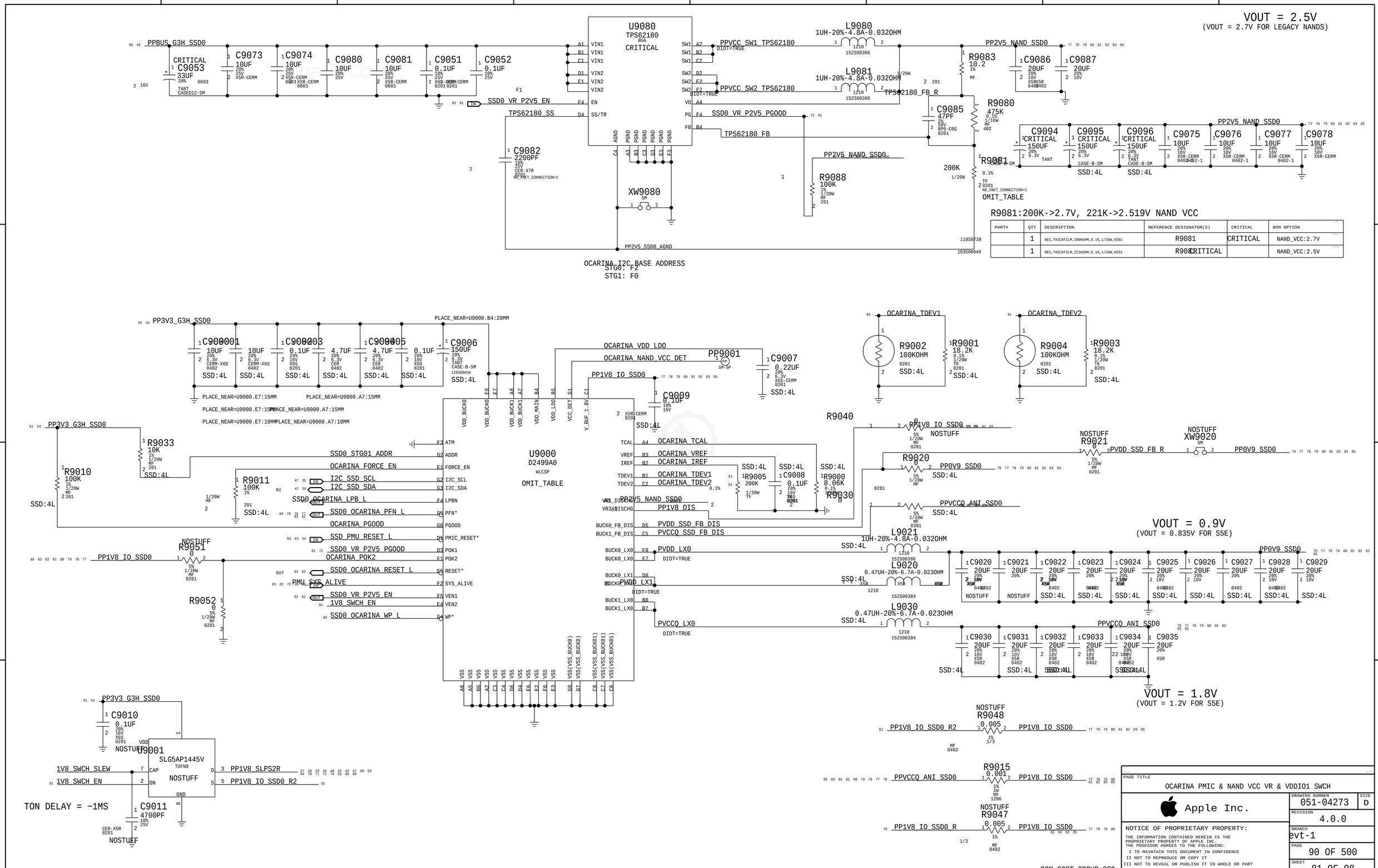
VOUT = 2.5V
(VOUT = 2.7V FOR LEGACY NANDS)
U9080
TPS62180
BGA
CRITICAL
PPBUS_G3H_SSD0
C9053 33UF
C9073 10UF
C9074 10UF
C9080 10UF
C9081 10UF
C9051 0.1UF
C9052 0.1UF
SSD0_VR_P2V5_EN
TPS62180_SS
C9082 2200PF
XW9080
PP2V5_SSD0_AGND
PPVCC_SW1_TPS62180
PPVCC_SW2_TPS62180
L9080 1UH-20%-4.8A-0.032OHM
L9081 1UH-20%-4.8A-0.032OHM
TPS62180_FB_R
SSD0_VR_P2V5_PGOOD
TPS62180_FB
R9083 10.2
C9085 47PF
R9080 475K
R9081 200K
R9088 100K
PP2V5_NAND_SSD0
C9086 20UF
C9087 20UF
C9094 CRITICAL 150UF
C9095 CRITICAL 150UF
C9096 CRITICAL 150UF
C9075 10UF
C9076 10UF
C9077 10UF
C9078 10UF
OMIT_TABLE
R9081:200K->2.7V, 221K->2.519V NAND VCC
OCARINA_I2C_BASE_ADDRESS
STG0: F2
STG1: F0
PP3V3_G3H_SSD0
C900001 10UF
C900003 0.1UF
C900005 4.7UF
C9006 150UF
PLACE_NEAR=U9000.B4:20MM
PLACE_NEAR=U9000.E7:15MM
PLACE_NEAR=U9000.A7:15MM
PLACE_NEAR=U9000.E7:10MM
OCARINA_VDD_LDO
OCARINA_NAND_VCC_DET
PP9001
C9007 0.22UF
PP1V8_IO_SSD0
C9009 0.1UF
OCARINA_TDEV1
OCARINA_TDEV2
R9002 100KOHM
R9001 18.2K
R9004 100KOHM
R9003 18.2K
R9033 10K
R9010 100K
R9011 100K
R9051 0
R9052 0
U9000
D2499A0
WLCSP
OMIT_TABLE
SSD0_STG01_ADDR
OCARINA_FORCE_EN
I2C_SSD_SCL
I2C_SSD_SDA
SSD0_OCARINA_LPB_L
SSD0_OCARINA_PFN_L
OCARINA_PGOOD
SSD_PMU_RESET_L
SSD0_VR_P2V5_PGOOD
OCARINA_POK2
SSD0_OCARINA_RESET_L
PMU_SYS_ALIVE
SSD0_VR_P2V5_EN
1V8_SWCH_EN
SSD0_OCARINA_WP_L
OCARINA_TCAL
OCARINA_VREF
OCARINA_IREF
OCARINA_TDEV1
OCARINA_TDEV2
PP2V5_NAND_SSD0
PP1V8_DIS
PVDD_SSD_FB_DIS
PVCCQ_SSD_FB_DIS
PVDD_LX0
PVDD_LX1
PVCCQ_LX0
R9040 0
R9021 0
XW9020
PP0V9_SSD0
R9020 0
PPVCCQ_ANI_SSD0
R9005 200K
C9008 0.1UF
R9000 8.06K
R9030 0
L9021 1UH-20%-4.8A-0.032OHM
L9020 0.47UH-20%-6.7A-0.023OHM
L9030 0.47UH-20%-6.7A-0.023OHM
C9020 20UF
C9021 20UF
C9022 20UF
C9023 20UF
C9024 20UF
C9025 20UF
C9026 20UF
C9027 20UF
C9028 20UF
C9029 20UF
C9030 20UF
C9031 20UF
C9032 20UF
C9033 20UF
C9034 20UF
C9035 20UF
VOUT = 0.9V
(VOUT = 0.835V FOR S5E)
VOUT = 1.8V
(VOUT = 1.2V FOR S5E)
PP3V3_G3H_SSD0
C9010 0.1UF
U9001
SLG5AP1445V
TDFN8
1V8_SWCH_SLEW
1V8_SWCH_EN
PP1V8_SLPS2R
PP1V8_IO_SSD0_R2
TON DELAY = ~1MS
C9011 4700PF
NOSTUFF
R9048 0.005
PP1V8_IO_SSD0_R2
R9015 0.001
PPVCCQ_ANI_SSD0
R9047 0.005
PP1V8_IO_SSD0_R
BOM_COST_GROUP=SSD
PAGE TITLE
OCARINA PMIC & NAND VCC VR & VDDIO1 SWCH
Apple Inc.
DRAWING NUMBER
051-04273
SIZE
D
REVISION
4.0.0
BRANCH
evt-1
PAGE
90 OF 500
SHEET
81 OF 98
NOTICE OF PROPRIETARY PROPERTY:
THE INFORMATION CONTAINED HEREIN IS THE PROPRIETARY PROPERTY OF APPLE INC.
THE POSESSOR AGREES TO THE FOLLOWING:
I TO MAINTAIN THIS DOCUMENT IN CONFIDENCE
II NOT TO REPRODUCE OR COPY IT
III NOT TO REVEAL OR PUBLISH IT IN WHOLE OR PART
IV ALL RIGHTS RESERVED

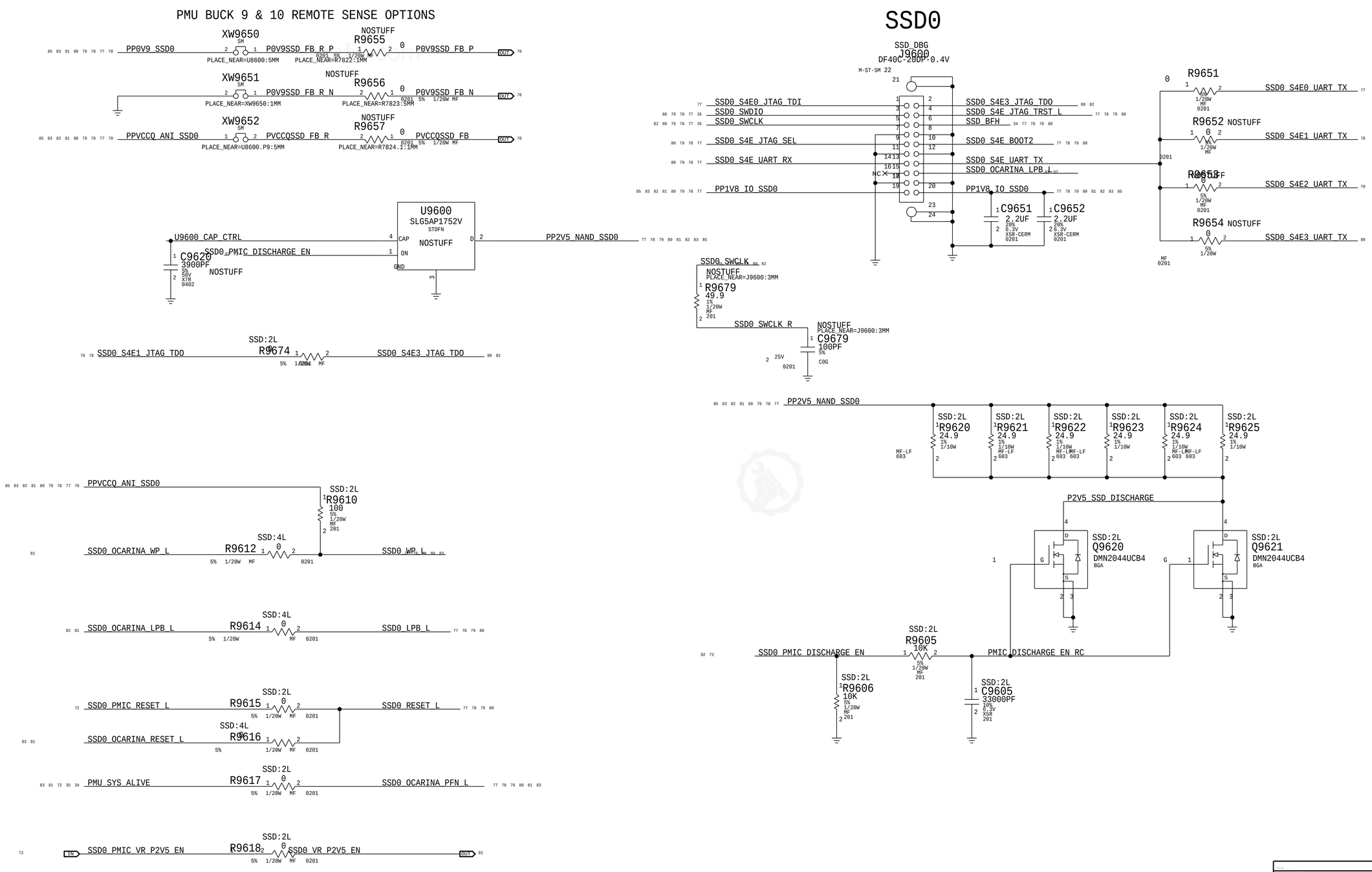

BOM_COST_GROUP=SSD

PAGE TITLE
SSD SUPPORT

Apple Inc.

DRAWING NUMBER 051-04273 SIZE D
REVISION 4.0.0
BRANCH evt-1
PAGE 96 OF 500
SHEET 82 OF 98

NOTICE OF PROPRIETARY PROPERTY:
THE INFORMATION CONTAINED HEREIN IS THE PROPRIETARY PROPERTY OF APPLE INC.
THE POSESSOR AGREES TO THE FOLLOWING:
I TO MAINTAIN THIS DOCUMENT IN CONFIDENCE
II NOT TO REPRODUCE OR COPY IT
III NOT TO REVEAL OR PUBLISH IT IN WHOLE OR PART
IV ALL RIGHTS RESERVED

Functional Test Points

J5110 - DFR Display Connector

DFR DISP VSYNC		FUNC_TEST=TRUE
DFR DISP TE		FUNC_TEST=TRUE
DFR DISP INT		FUNC_TEST=TRUE
DFR DISP RESET L		FUNC_TEST=TRUE
PP3V3 G3HSW DFR	3 TPS	FUNC_TEST=TRUE
MIPI DFR CLK FILT CONN P		FUNC_TEST=TRUE
MIPI DFR CLK FILT CONN N		FUNC_TEST=TRUE
MIPI DFR DATA FILT CONN P		FUNC_TEST=TRUE
MIPI DFR DATA FILT CONN N		FUNC_TEST=TRUE
PP1V8 DFR	4 TPS	FUNC_TEST=TRUE
I2C DFR SCL R		FUNC_TEST=TRUE
I2C DFR SDA R		FUNC_TEST=TRUE
GND	6 TPS	FUNC_TEST=TRUE

J5100 - DFR Touch Connector

DFR TOUCH LID OPEN L		FUNC_TEST=TRUE
DFR TOUCH RESET L		FUNC_TEST=TRUE
DFR PWR EN		FUNC_TEST=TRUE
TP DFR TOUCH GPIO2		FUNC_TEST=TRUE
PP5V G3S DFR FILT	1 TPS	FUNC_TEST=TRUE
SPI DFR CS L		FUNC_TEST=TRUE
SPI DFR MOSI		FUNC_TEST=TRUE
SPI DFR MISO R		FUNC_TEST=TRUE
SPI DFR CLK		FUNC_TEST=TRUE
DFR TOUCH INT L		FUNC_TEST=TRUE
DFR TOUCH CLK32K RESET L		FUNC_TEST=TRUE
TP DFR TOUCH PANEL DETECT		FUNC_TEST=TRUE
TP DFR TOUCH ROM WC		FUNC_TEST=TRUE
GND	6 TPS	FUNC_TEST=TRUE

J6700 - Keyboard Connector

GND FAN	2 TPS	FUNC_TEST=TRUE
PP5V G3S FAN CONN	2 TPS	FUNC_TEST=TRUE
FAN RT TACH		FUNC_TEST=TRUE
FAN RT PWM		FUNC_TEST=TRUE
PP5V G3S KBD	3 TPS	FUNC_TEST=TRUE
KBD BLC GSSOUT		FUNC_TEST=TRUE
KBD BLC GSLAT		FUNC_TEST=TRUE
KBD BLC GSSIN	1 TPS	FUNC_TEST=TRUE
KBD BLC GSSCK		FUNC_TEST=TRUE
KBD BLC XBLANK		FUNC_TEST=TRUE
I2C KBD SDA		FUNC_TEST=TRUE
I2C KBD SCL		FUNC_TEST=TRUE
KBD INT L		FUNC_TEST=TRUE
PMU RSLOC RST L		FUNC_TEST=TRUE
GND	6 TPS	FUNC_TEST=TRUE

J6701 - Trackpad Connector

ACT GND	4 TPS	FUNC_TEST=TRUE
PPVIN S4 TPAD FUSE	8 TPS	FUNC_TEST=TRUE
PP5V G3S TPAD CONN	2 TPS	FUNC_TEST=TRUE
PP3V3 G3S TPAD	3 TPS	FUNC_TEST=TRUE
I2C TPAD 3V3 SDA		FUNC_TEST=TRUE
I2C TPAD 3V3 SCL		FUNC_TEST=TRUE
SPI TPAD 3V3 CLK		FUNC_TEST=TRUE
SPI TPAD 3V3 MISO		FUNC_TEST=TRUE
SPI TPAD 3V3 CS L		FUNC_TEST=TRUE
SPI TPAD 3V3 MOSI		FUNC_TEST=TRUE
TPAD 3V3 SPI EN		FUNC_TEST=TRUE
TPAD 3V3 SPI INT L		FUNC_TEST=TRUE
TPAD 3V3 ACTUATOR DISABLE L		FUNC_TEST=TRUE
TPAD KBD WAKE L		FUNC_TEST=TRUE
GND	6 TPS	FUNC_TEST=TRUE

J4900 - Mesa Connector

PP3V0 MESA FILT CONN	2 TPS	FUNC_TEST=TRUE
PP1V8 MESA FILT CONN	1 TPS	FUNC_TEST=TRUE
PP1V8 MESA FILT CONN	1 TPS	FUNC_TEST=TRUE
SPI MESA MISO CONN		FUNC_TEST=TRUE
SPI MESA MOSI CONN		FUNC_TEST=TRUE
SPI MESA CLK CONN		FUNC_TEST=TRUE
MESA INT CONN		FUNC_TEST=TRUE
MESA BOOST EN CONN		FUNC_TEST=TRUE
PMU ONOFF R L CONN		FUNC_TEST=TRUE
GND	6 TPS	FUNC_TEST=TRUE

J6640 - MIC Connector

PDM DMIC CLK0		FUNC_TEST=TRUE
AUD DMIC0 DATA CONN	1 TPS	FUNC_TEST=TRUE
PP1V8 DMIC		FUNC_TEST=TRUE
PDM DMIC CLK1		FUNC_TEST=TRUE
AUD DMIC1 DATA CONN		FUNC_TEST=TRUE
GND		FUNC_TEST=TRUE

J6410 - REAR LEFT CONNECTOR

SPKRCONN RL OUTP		FUNC_TEST=TRUE
SPKRCONN RL OUTN		FUNC_TEST=TRUE
SPKR ID0		FUNC_TEST=TRUE
GND	2 TPS	FUNC_TEST=TRUE

J6410 - FRONT LEFT CONNECTOR

SPKRCONN FL OUTP		FUNC_TEST=TRUE
SPKRCONN FL OUTN		FUNC_TEST=TRUE
GND	2 TPS	FUNC_TEST=TRUE

J6510 - REAR RIGHT CONNECTOR

SPKRCONN RR OUTP		FUNC_TEST=TRUE
SPKRCONN RR OUTN		FUNC_TEST=TRUE
SPKR ID1		FUNC_TEST=TRUE
GND	2 TPS	FUNC_TEST=TRUE

J6550 - FRONT RIGHT CONNECTOR

SPKRCONN FR OUTP		FUNC_TEST=TRUE
SPKRCONN FR OUTN		FUNC_TEST=TRUE
GND	2 TPS	FUNC_TEST=TRUE

J6600 - Audio Jack Connector

AUD CONN HP LEFT		FUNC_TEST=TRUE
AUD CONN HP RIGHT		FUNC_TEST=TRUE
AUD CONN RING2		FUNC_TEST=TRUE
AUD CONN SLEEVE		FUNC_TEST=TRUE
AUD CONN HP SENSE L		FUNC_TEST=TRUE
AUD CONN HP SENSE R		FUNC_TEST=TRUE
AUD CONN TIP SENSE		FUNC_TEST=TRUE
AUD CONN RING SENSE		FUNC_TEST=TRUE
AUD CONN SLEEVE XW		FUNC_TEST=TRUE
AUD CONN RING2 XW		FUNC_TEST=TRUE
GND	2 TPS	FUNC_TEST=TRUE

J6950 - Battery Connector

PPVBAT G3H CONN	8 TPS	FUNC_TEST=TRUE
GND	8 TPS	FUNC_TEST=TRUE

J6951 - BATTERY SENSE CONNECTOR

SYS DETECT L		FUNC_TEST=TRUE
SYS DETECT		FUNC_TEST=TRUE
SMBUS 3V3 BATT SCL		FUNC_TEST=TRUE
SMBUS 3V3 BATT SDA		FUNC_TEST=TRUE
SENSOR PWR EN		FUNC_TEST=TRUE
GND	1 TPS	FUNC_TEST=TRUE

Hall Effect

SMC LID LEFT		FUNC_TEST=TRUE
SMC LID RIGHT		FUNC_TEST=TRUE
IPD LID OPEN		FUNC_TEST=TRUE
GND	1 TPS	FUNC_TEST=TRUE

J8500 - eDP Connector

PPVOUT S0 LCDBKLT		FUNC_TEST=TRUE
I2C FTCAM ISOL SCL		FUNC_TEST=TRUE
I2C FTCAM ISOL SDA		FUNC_TEST=TRUE
I2C ALS SCL R		FUNC_TEST=TRUE
I2C ALS SDA R		FUNC_TEST=TRUE
I2C DISP SCL	1 TPS	FUNC_TEST=TRUE
I2C DISP SDA		FUNC_TEST=TRUE
I2C BKLT SCL		FUNC_TEST=TRUE
I2C BKLT SDA		FUNC_TEST=TRUE
EDP BKLT PWM		FUNC_TEST=TRUE
EDP BKLT EN		FUNC_TEST=TRUE
EDP PANEL PWR EN		FUNC_TEST=TRUE
TP LCD IRQ L		FUNC_TEST=TRUE
DP INT HPD		FUNC_TEST=TRUE
EDP PANEL PWR BUF EN		FUNC_TEST=TRUE
PP3V3 S0SW LCD		FUNC_TEST=TRUE
PP5V S0SW LCD	1 TPS	FUNC_TEST=TRUE
PP5V G3S ALSCAM		FUNC_TEST=TRUE
MIPI FTCAM CLK ISOL FILT CONN P		FUNC_TEST=TRUE
MIPI FTCAM CLK ISOL FILT CONN N		FUNC_TEST=TRUE
MIPI FTCAM DATA ISOL FILT CONN P		FUNC_TEST=TRUE
MIPI FTCAM DATA ISOL FILT CONN N		FUNC_TEST=TRUE
EDP AUXCH P		FUNC_TEST=TRUE
EDP AUXCH N		FUNC_TEST=TRUE
GND	12 TPS	FUNC_TEST=TRUE

J3300 - Left USB-C Connector

PP20V USBC XA VBUS		FUNC_TEST=TRUE
USBC XA CC1		FUNC_TEST=TRUE
USBC XA CC2		FUNC_TEST=TRUE
USBC XA SBU1		FUNC_TEST=TRUE
USBC XA SBU2		FUNC_TEST=TRUE
PP20V USBC XB VBUS		FUNC_TEST=TRUE
USBC XB CC1		FUNC_TEST=TRUE
USBC XB CC2		FUNC_TEST=TRUE
USBC XB SBU1		FUNC_TEST=TRUE
USBC XB SBU2		FUNC_TEST=TRUE
TP USBC PP20V XA		FUNC_TEST=TRUE
TP USBC PP20V XB		FUNC_TEST=TRUE
USB SOC TYPEC P		FUNC_TEST=TRUE
USB SOC TYPEC N		FUNC_TEST=TRUE
GND	48 TPS	FUNC_TEST=TRUE

PROBE BLOCK GRID - DFU/SOC/DCI

TP USB3 EXTC R2D C N		
TP USB FIXT1 N		
TP USB3 EXTC D2R N		
TP USB3 EXTC D2R P		
TP USB FIXT1 P		
TP USB3 EXTC R2D C P		
GND		FUNC_TEST=TRUE
USB3 EXTD R2D C N		
TP USB FIXT2 N		
USB3 EXTD D2R N		
USB3 EXTD D2R P		
TP USB FIXT2 P		
USB3 EXTD R2D C P		
GND		FUNC_TEST=TRUE
USB3 BSSB D2R R P		FUNC_TEST=TRUE
USB3 BSSB D2R R N		FUNC_TEST=TRUE
USB3 BSSB R2D P		FUNC_TEST=TRUE
USB3 BSSB R2D N		FUNC_TEST=TRUE
GND	12 TPS	FUNC_TEST=TRUE

JC400 SWDL OMIT SM-TP-0.5MM: USB3_D2R_P, GND, USB2_D_P, GND, USB3_R2D_P; USB3_D2R_N, GND, USB2_D_N, GND, USB3_R2D_N

JC410 SWDL OMIT SM-TP-0.5MM: USB3_D2R_P, GND, USB2_D_P, GND, USB3_R2D_P; USB3_D2R_N, GND, USB2_D_N, GND, USB3_R2D_N

DFU/SOC/FCT DEBUG

SOC USB VBUS		FUNC_TEST=TRUE
SOC FORCE DFU		FUNC_TEST=TRUE
SOC DFU STATUS		FUNC_TEST=TRUE
SOC DOCK CONNECT		FUNC_TEST=TRUE
DFUMUX SEL		FUNC_TEST=TRUE
SOC SWD MUX SEL PCH		FUNC_TEST=TRUE
SOC COLD RESET L		FUNC_TEST=TRUE
USB SOC N		FUNC_TEST=TRUE
USB SOC P		FUNC_TEST=TRUE
PCH UART DEBUG R2D		FUNC_TEST=TRUE
PCH UART DEBUG D2R		FUNC_TEST=TRUE
SWD SOC SWCLK XB		FUNC_TEST=TRUE
SWD SOC SWDIO XB		FUNC_TEST=TRUE
DEBUG JTAG SOC TDI		FUNC_TEST=TRUE
DEBUG JTAG SOC TDO		FUNC_TEST=TRUE
TP JTAG SOC TRST L	7 TPS	FUNC_TEST=TRUE
SMC DEBUGPRT TX		FUNC_TEST=TRUE
SMC DEBUGPRT RX		FUNC_TEST=TRUE
SOC DEBUGPRT TX		FUNC_TEST=TRUE
SOC DEBUGPRT RX		FUNC_TEST=TRUE
I2C PWR SCL		FUNC_TEST=TRUE
I2C PWR SDA		FUNC_TEST=TRUE
I2C UPC SCL		FUNC_TEST=TRUE
I2C UPC SDA		FUNC_TEST=TRUE
GND	10 TPS	FUNC_TEST=TRUE

DFU/SOC/FCT DISCHARGE

PPDCIN G3H CHGR		FUNC_TEST=TRUE
PPVBAT G3H CHGR REG		FUNC_TEST=TRUE

Memory Power

PP1V2 S3		FUNC_TEST=TRUE
PVDDQ PGOOD		FUNC_TEST=TRUE
PVDDQ EN		FUNC_TEST=TRUE
PP1V8 S3 MEM		FUNC_TEST=TRUE
PP1V2 S3 CPUDDR	4 TPS	FUNC_TEST=TRUE
PP0V6 S0 DDRVTT		FUNC_TEST=TRUE
GND	5 TPS	FUNC_TEST=TRUE

Wireless/BT Power

PP3V3 G3S WLANBT		FUNC_TEST=TRUE
PP1V8 G3S WLANBT		FUNC_TEST=TRUE
GND	2 TPS	FUNC_TEST=TRUE

DFU/SOC/FCT DMM/Power Sequence

PPDCIN G3H	6 TPS	FUNC_TEST=TRUE
PP3V3 G3H		FUNC_TEST=TRUE
PPVCC S0 CPU		FUNC_TEST=TRUE
PPVCCGT S0 CPU		FUNC_TEST=TRUE
PPVCCSA S0 CPU		FUNC_TEST=TRUE
PPVCCIO S0 CPU		FUNC_TEST=TRUE
PPVCCEDRAM S0 CPU		FUNC_TEST=TRUE
PP1V S0SW	6 TPS	FUNC_TEST=TRUE
PP1V2 S0SW		FUNC_TEST=TRUE
PP1V S3		FUNC_TEST=TRUE
PP1V PRIM		FUNC_TEST=TRUE
PPVPCORE S5		FUNC_TEST=TRUE
PP3V G3H RTC		FUNC_TEST=TRUE
ALL SYS PWRGD		FUNC_TEST=TRUE
PCH RTC RESET L		FUNC_TEST=TRUE
PM PCH PWROK		FUNC_TEST=TRUE
PM PCH SYS PWROK		FUNC_TEST=TRUE
PM RSMRST L		FUNC_TEST=TRUE
PM SLP S3 L		FUNC_TEST=TRUE
PM SLP S0 L		FUNC_TEST=TRUE
PLT RST L		FUNC_TEST=TRUE
PM THRMTRIP L		FUNC_TEST=TRUE
PCH PWRBTN L		FUNC_TEST=TRUE
CPU PROCHOT R L		FUNC_TEST=TRUE
CPU CATERR L		FUNC_TEST=TRUE
CPU VR READY		FUNC_TEST=TRUE
PMU PVDDMAIN EN		FUNC_TEST=TRUE
UPC PMU RESET		FUNC_TEST=TRUE
PP3V3 G3H RTC		FUNC_TEST=TRUE
CHGR EN MVR		FUNC_TEST=TRUE
P3V3G3S EN		FUNC_TEST=TRUE
PP3V3 G3S		FUNC_TEST=TRUE
P1V8G3S EN		FUNC_TEST=TRUE
PP1V8 IO SSD0		FUNC_TEST=TRUE
PPVCCQ ANI SSD0		FUNC_TEST=TRUE
PP0V9 SSD0		FUNC_TEST=TRUE
PP2V5 NAND SSD0		FUNC_TEST=TRUE
SSD0 WP L		FUNC_TEST=TRUE
SSD0 OCARINA PFN L		FUNC_TEST=TRUE
SSD0 OCARINA RESET L		FUNC_TEST=TRUE
SSD PMU RESET L		FUNC_TEST=TRUE
PP3V3 AWAKE		FUNC_TEST=TRUE
PMU COLD RESET L		FUNC_TEST=TRUE
PM SLP S4 L		FUNC_TEST=TRUE
PM SLP S5 L		FUNC_TEST=TRUE
TP SMC FIXTURE MODE L		FUNC_TEST=TRUE
PP1V8 SLPS2R		FUNC_TEST=TRUE
SOC SOCHOT L		FUNC_TEST=TRUE
PP1V2 AWAKE		FUNC_TEST=TRUE
PP0V82 SLPDDR		FUNC_TEST=TRUE
PPVDDCPU AWAKE		FUNC_TEST=TRUE
PP1V8 S5		FUNC_TEST=TRUE
PPBUS G3H		FUNC_TEST=TRUE
PP1V8 G3S		FUNC_TEST=TRUE
PMU ACTIVE READY		FUNC_TEST=TRUE
PP3V3 S5		FUNC_TEST=TRUE
PVCCIO EN		FUNC_TEST=TRUE
CPU C10 GATE L		FUNC_TEST=TRUE
PP0V9 SLPDDR		FUNC_TEST=TRUE
PP1V1 SLPDDR		FUNC_TEST=TRUE
PP1V1 SLPS2R		FUNC_TEST=TRUE
PP1V8 AWAKE		FUNC_TEST=TRUE
PP1V8 SLPS2R PMUVDDGPIO		FUNC_TEST=TRUE
P1V1 SLPDDR SOCFET EN		FUNC_TEST=TRUE
PMU CLK32K WLANBT		FUNC_TEST=TRUE
SOC WDOG		FUNC_TEST=TRUE
PMU CLK32K SOC		FUNC_TEST=TRUE
PMU SYS ALIVE		FUNC_TEST=TRUE
P5VG3S EN		FUNC_TEST=TRUE
PP0V8 SLPS2R		FUNC_TEST=TRUE
PPVDDCPUSRAM AWAKE		FUNC_TEST=TRUE
P5VG3S PGOOD		FUNC_TEST=TRUE
PM SYSRST L		FUNC_TEST=TRUE
SMC SYSRST L		FUNC_TEST=TRUE
PP5V G3S		FUNC_TEST=TRUE
SSD0 S4E0 ANI0 VREF		FUNC_TEST=TRUE
SSD0 S4E0 ANI1 VREF		FUNC_TEST=TRUE
SSD0 S4E1 ANI0 VREF		FUNC_TEST=TRUE
SSD0 S4E1 ANI1 VREF		FUNC_TEST=TRUE
SSD0 S4E2 ANI0 VREF		FUNC_TEST=TRUE
SSD0 S4E2 ANI1 VREF		FUNC_TEST=TRUE
SSD0 S4E3 ANI0 VREF		FUNC_TEST=TRUE
SSD0 S4E3 ANI1 VREF		FUNC_TEST=TRUE
GND	8 TPS	FUNC_TEST=TRUE

PAGE TITLE: FCT

Apple Inc.

DRAWING NUMBER: 051-04273 SIZE: D

REVISION: 4.0.0

BRANCH: evt-1

PAGE: 124 OF 500

SHEET: 83 OF 98

NOTICE OF PROPRIETARY PROPERTY:
THE INFORMATION CONTAINED HEREIN IS THE PROPRIETARY PROPERTY OF APPLE INC.
THE POSESSOR AGREES TO THE FOLLOWING:
I TO MAINTAIN THIS DOCUMENT IN CONFIDENCE
II NOT TO REPRODUCE OR COPY IT
III NOT TO REVEAL OR PUBLISH IT IN WHOLE OR PART
IV ALL RIGHTS RESERVED

Vinafix.com

76 36	MIPI_FTCAM_DATA_P<0>	P5MM-SP SM-SP	PPC549
76 36	MIPI_FTCAM_DATA_N<0>	P5MM-SP SM-SP	PPC550
76 36	MIPI_FTCAM_CLK_P	P3MM-MSM SM	PPC551
76 36	MIPI_FTCAM_CLK_N	P3MM-MSM SM	PPC552

77 37	PCIE_SSD0_D2R_N<0>	P2MM SM	PPC510
37	PCIE_SSD0_D2R_P<0>	P2MM SM	PPC511

37 14	PCIE_CLK100M_SOC_N	P2MM SM	PPC539
37 14	PCIE_CLK100M_SOC_P	P2MM SM	PPC540
OUT 78 77 37	PCIE_CLK100M_SSD0_01_N	P2MM SM	PPC541
37 78 77	PCIE_CLK100M_SSD0_01_P	P2MM SM	PPC542
80 79 37	PCIE_CLK100M_SSD0_23_N	P2MM SM	PPC553
80 79 37	PCIE_CLK100M_SSD0_23_P	P2MM SM	PPC554
OUT 25 14	PCIE_CLK100M_TBT_X_N	P2MM SM	PPC543
25 14	PCIE_CLK100M_TBT_X_P	P2MM SM	PPC544

5	XDP_BPM_L<0>	TP-P5	TPC520

SAR Fusion Sensor Debug

43 35	SPI_ACCEL_CS_L	P2MM SM	PPC561
43 35	SPI_AOP_SENSOR_MISO	P2MM SM	PPC564
43 35	ACCEL_INT1	P2MM SM	PPC565

SOC SENSE

72 38	SOC_VDDCPU_SENSE	P2MM SM	PPC530

ACE-TR AUX/LS

28 25	USBC_XA_AUXLSX1	P2MM SM	PPC570
28 25	USBC_XA_AUXLSX2	P2MM SM	PPC571
29 25	USBC_XB_AUXLSX1	P2MM SM	PPC572
29 25	USBC_XB_AUXLSX2	P2MM SM	PPC573

ACE GPIO PPs

28 27	UPC_XA_SER_DBG	P2MM SM	PPC578
29 27	UPC_XB_SER_DBG	P2MM SM	PPC579

PMIC Switch Nodes

70	PVDDCPUAWAKE_SW0	P2MM SM	PPC509
70	PVDDCPUAWAKE_SW1	P2MM SM	PPC512
70	PVDDCPUAWAKE_SW2	P2MM SM	PPC513
70	PVDDCPUAWAKE_SW3	P2MM SM	PPC514
70	PVDDCPUSRAMAWAKE_SW0	P2MM SM	PPC515
70	P0V8SLPDDR_SW0	P2MM SM	PPC516
70	P0V8SLPDDR_SW1	P2MM SM	PPC517
70	P1V8SLPS2R_SW0	P2MM SM	PPC518
70	P1V1SLPS2R_SW0	P2MM SM	PPC521
70	P1V1SLPS2R_SW1	P2MM SM	PPC522
70	P0V9SLPDDR_SW0	P2MM SM	PPC523
70	P0V9SLPDDR_SW1	P2MM SM	PPC524
70	PVPCORES5_SW0	P2MM SM	PPC527
70	PVPCORES5_SW1	P2MM SM	PPC525
70	P1VPRIM_SW1	P2MM SM	PPC528

PAGE TITLE

PROBE POINTS

Apple Inc.

DRAWING NUMBER 051-04273 SIZE D

REVISION 4.0.0

BRANCH evt-1

PAGE 125 OF 500

SHEET 84 OF 98

NOTICE OF PROPRIETARY PROPERTY:
THE INFORMATION CONTAINED HEREIN IS THE PROPRIETARY PROPERTY OF APPLE INC.
THE POSESSOR AGREES TO THE FOLLOWING:
I TO MAINTAIN THIS DOCUMENT IN CONFIDENCE
II NOT TO REPRODUCE OR COPY IT
III NOT TO REVEAL OR PUBLISH IT IN WHOLE OR PART
IV ALL RIGHTS RESERVED

Vinafix.com

KEYBOARD CONNECTOR 5V

PP5V_G3S_KBD

CD500 12PF 5% 25V NP0-C0G 0201

TRACKPAD SPI CLK

SPI_TPAD_3V3_CLK

CD510 12PF 5% 25V NP0-C0G 0201

EOPIO EDRAM VR HIGH SIDE

PPBUS_HS_CPU

CD520 12PF 5% 25V NP0-C0G 0201

CD521 3.0PF +/-0.1PF 25V NP0-C0G 0201

NAND VCC

PP2V5_NAND_SSD0

CD550 12PF 5% 25V NP0-C0G 0201

CD551 3.0PF +/-0.1PF 25V NP0-C0G 0201

CALPE BUCK 9

PP0V9_SSD0

CD532 12PF 5% 25V NP0-C0G 0201

CD533 3.0PF +/-0.1PF 25V NP0-C0G 0201

CALPE BUCK 10

PPVCCQ_ANI_SSD0

CD542 12PF 5% 25V NP0-C0G 0201

CD543 3.0PF +/-0.1PF 25V NP0-C0G 0201

S4E

PPBUS_G3H_SSD0

CD5N0 12PF 5% 25V NP0-C0G 0201

CD5N1 3.0PF +/-0.1PF 25V NP0-C0G 0201

OCARINA VDD

PP0V9_SSD0

CD530 12PF 5% 25V NP0-C0G 0201

CD531 3.0PF +/-0.1PF 25V NP0-C0G 0201

OCARINA VDDIO2

PPVCCQ_ANI_SSD0

CD540 12PF 5% 25V NP0-C0G 0201

CD541 3.0PF +/-0.1PF 25V NP0-C0G 0201

CD545 12PF 5% 25V NP0-C0G 0201

CD546 3.0PF +/-0.1PF 25V NP0-C0G 0201

S4E U8600 VDD

PP0V9_SSD0

CD560 12PF 5% 25V NP0-C0G 0201

CD561 12PF 5% 25V NP0-C0G 0201

CD562 3.0PF +/-0.1PF 25V NP0-C0G

CD563 3.0PF +/-0.1PF 25V NP0-C0G 0201

CD564 12PF 5% 25V NP0-C0G 0201

CD565 3.0PF +/-0.1PF NP0-C0G

S4E U8600 VCC

PP2V5_NAND_SSD0

CD570 12PF 5% 25V NP0-C0G 0201

CD571 12PF 5% 25V 0201

CD572 3.0PF +/-0.1PF 25V 0201

CD573 3.0PF +/-0.1PF 25V NP0-C0G 0201

S4E U8600 VDDIO1

PP1V8_IO_SSD0

CD580 12PF 5% 25V NP0-C0G 0201

CD582 3.0PF +/-0.1PF 25V NP0-C0G 0201

S4E U8600 VDDIO2

PPVCCQ_ANI_SSD0

CD590 12PF 5% 25V NP0-C0G 0201

CD591 12PF 5% 25V NP0-C0G 0201

CD592 3.0PF +/-0.1PF 25V NP0-C0G 0201

CD593 3.0PF +/-0.1PF 25V NP0-C0G 0201

S4E U8700 VDD

PP0V9_SSD0

CD5A0 12PF 5% 25V NP0-C0G 0201

CD5A1 12PF 5% 25V NP0-C0G 0201

CD5A2 3.0PF +/-0.1PF 25V NP0-C0G 0201

CD5A3 3.0PF +/-0.1PF 25V NP0-C0G 0201

CD5A4 12PF 5% 25V NP0-C0G 0201

CD5A5 3.0PF +/-0.1PF 25V NP0-C0G 0201

S4E U8700 VCC

PP2V5_NAND_SSD0

CD5B0 12PF 5% 25V NP0-C0G 0201

CD5B1 12PF 5% 25V NP0-C0G 0201

CD5B2 3.0PF +/-0.1PF 25V NP0-C0G 0201

CD5B3 3.0PF +/-0.1PF 25V NP0-C0G 0201

S4E U8700 VDDIO1

PP1V8_IO_SSD0

CD5C0 12PF 5% 25V NP0-C0G 0201

CD5C2 3.0PF +/-0.1PF 25V NP0-C0G 0201

S4E U8700 VDDIO2

PPVCCQ_ANI_SSD0

CD5D0 12PF 5% 25V NP0-C0G 0201

CD5D2 3.0PF +/-0.1PF 25V NP0-C0G 0201

S4E U8800 VDD

PP0V9_SSD0

CD5E0 12PF 5% 25V NP0-C0G 0201

CD5E1 12PF 5% 25V NP0-C0G 0201

CD5E2 3.0PF +/-0.1PF 25V NP0-C0G

CD5E3 3.0PF +/-0.1PF 25V NP0-C0G 0201

CD5E4 12PF 5% 25V NP0-C0G 0201

CD5E5 3.0PF +/-0.1PF 25V NP0-C0G

S4E U8800 VCC

PP2V5_NAND_SSD0

CD5F0 12PF 5% 25V NP0-C0G 0201

CD5F1 12PF 5% 25V NP0-C0G 0201

CD5F2 3.0PF +/-0.1PF 25V NP0-C0G

CD5F3 3.0PF +/-0.1PF 25V NP0-C0G 0201

S4E U8800 VDDIO1

PP1V8_IO_SSD0

CD5G0 12PF 5% 25V NP0-C0G 0201

CD5G2 3.0PF +/-0.1PF 25V NP0-C0G 0201

S4E U8800 VDDIO2

PPVCCQ_ANI_SSD0

CD5H0 12PF 5% 25V NP0-C0G 0201

CD5H2 3.0PF +/-0.1PF 25V NP0-C0G 0201

S4E U8900 VDD

PP0V9_SSD0

CD5J0 12PF 5% 25V NP0-C0G 0201

CD5J1 12PF 5% 25V NP0-C0G 0201

CD5J2 3.0PF +/-0.1PF 25V NP0-C0G 0201

CD5J3 3.0PF +/-0.1PF 25V NP0-C0G 0201

S4E U8900 VCC

PP2V5_NAND_SSD0

CD5K0 12PF 5% 25V NP0-C0G 0201

CD5K1 12PF 5% 25V NP0-C0G 0201

CD5K2 3.0PF +/-0.1PF 25V NP0-C0G 0201

CD5K3 3.0PF +/-0.1PF 25V NP0-C0G 0201

S4E U8900 VDDIO1

PP1V8_IO_SSD0

CD5L0 12PF 5% 25V NP0-C0G 0201

CD5L2 3.0PF +/-0.1PF 25V NP0-C0G 0201

S4E U8900 VDDIO2

PPVCCQ_ANI_SSD0

CD5M0 12PF 5% 25V NP0-C0G 0201

CD5M2 3.0PF +/-0.1PF 25V NP0-C0G 0201

BOM_COST_GROUP=DESENSE

SYNC_MASTER=J213_KELVIN SYNC_DATE=09/13/2018

PAGE TITLE

DESENSE 1

Apple Inc.

NOTICE OF PROPRIETARY PROPERTY:
THE INFORMATION CONTAINED HEREIN IS THE PROPRIETARY PROPERTY OF APPLE INC.
THE POSESSOR AGREES TO THE FOLLOWING:
I TO MAINTAIN THIS DOCUMENT IN CONFIDENCE
II NOT TO REPRODUCE OR COPY IT
III NOT TO REVEAL OR PUBLISH IT IN WHOLE OR PART
IV ALL RIGHTS RESERVED

DRAWING NUMBER 051-04273 SIZE D

REVISION 4.0.0

BRANCH evt-1

PAGE 135 OF 500

SHEET 85 OF 98

CALPE VDD MAIN HIGH SIDE INPUT

PP3V3_G3H_PMU_VDDMAIN

CD670 12PF 5% 25V NP0-C0G 0201
CD671 12PF 5% 25V NP0-C0G 0201
CD672 12PF 5% 25V NP0-C0G 0201
CD673 12PF 5% 25V NP0-C0G 0201
CD674 12PF 5% 25V NP0-C0G 0201
CD675 12PF 5% 25V NP0-C0G 0201
CD676 12PF 5% 25V NP0-C0G 0201
CD677 12PF 5% 25V NP0-C0G 0201
CD678 12PF 5% 25V NP0-C0G 0201
CD679 12PF 5% 25V NP0-C0G 0201

CD6G0 3.0PF +/-0.1PF 25V NP0-C0G 0201
CD6G1 3.0PF +/-0.1PF 25V NP0-C0G 0201
CD6G2 3.0PF +/-0.1PF 25V NP0-C0G 0201
CD6G3 3.0PF +/-0.1PF 25V NP0-C0G 0201
CD6G4 3.0PF +/-0.1PF 25V NP0-C0G 0201
CD6G5 3.0PF +/-0.1PF 25V NP0-C0G 0201
CD6G6 3.0PF +/-0.1PF 25V NP0-C0G 0201
CD6G7 3.0PF +/-0.1PF 25V NP0-C0G 0201
CD6G8 3.0PF +/-0.1PF 25V NP0-C0G 0201
CD6G9 3.0PF +/-0.1PF 25V NP0-C0G 0201

VR 5V G3S

PP5V_G3S

CD620 12PF 5% 25V NP0-C0G 0201
CD621 12PF 5% 25V NP0-C0G 0201
CD622 12PF 5% 25V NP0-C0G 0201

CD623 3.0PF +/-0.1PF 25V NP0-C0G 0201
CD624 3.0PF +/-0.1PF 25V NP0-C0G 0201
CD625 3.0PF +/-0.1PF 25V NP0-C0G 0201

VR 3V3 G3H

PP3V3_G3H

CD630 12PF 5% 25V NP0-C0G 0201
CD631 12PF 5% 25V NP0-C0G 0201
CD632 12PF 5% 25V NP0-C0G

CD633 3.0PF +/-0.1PF 25V NP0-C0G 0201
CD634 3.0PF +/-0.1PF 25V NP0-C0G 0201
CD635 3.0PF +/-0.1PF 25V NP0-C0G 0201

VR 3V3 G3H HIGH SIDE

PPVIN_G3H_P3V3G3H

CD640 12PF 5% 25V NP0-C0G 0201
CD641 3.0PF +/-0.1PF 25V NP0-C0G 0201

VR 5V G3S HIGH SIDE

PPVIN_G3H_P5VG3S

CD650 12PF 5% 25V NP0-C0G 0201
CD651 3.0PF +/-0.1PF 25V NP0-C0G 0201

BATTERY CONNECTOR SYS DETECT

SYS_DETECT_L

CD660 12PF 5% 25V NP0-C0G 0201
CD661 3.0PF +/-0.1PF 25V NP0-C0G 0201

VR 5V ALS

PP5V_G3S_CPUREG_MISC

CD6R1 12PF 5% 25V NP0-C0G 0201
CD6R2 3.0PF +/-0.1PF 25V NP0-C0G 0201

CALPE PCH 1V1 PRIM

PP1V_PRIM

CD680 12PF 5% 25V NP0-C0G 0201
CD681 12PF 5% 25V NP0-C0G 0201

CALPE 0V82 SLPDDR

PP0V82_SLPDDR

CD690 12PF 5% 25V NP0-C0G 0201
CD691 12PF 5% 25V NP0-C0G 0201

CALPE CPU AWAKE

PPVDDCPU_AWAKE

CD6A0 12PF 5% 25V NP0-C0G 0201
CD6A1 3.0PF +/-0.1PF 25V NP0-C0G 0201

CALPE CPU SRAM AWAKE

PPVDDCPUSRAM_AWAKE

CD6B0 12PF 5% 25V NP0-C0G 0201
CD6B1 3.0PF +/-0.1PF 25V NP0-C0G 0201

CALPE 1V8 SLPS2R

PP1V8_SLPS2R

CD6C0 12PF 5% 25V NP0-C0G 0201
CD6C1 3.0PF +/-0.1PF 25V NP0-C0G 0201

CALPE 1V1 SLPS2R

PP1V1_SLPS2R

CD6D0 12PF 5% 25V NP0-C0G 0201
CD6D1 3.0PF +/-0.1PF 25V NP0-C0G 0201

CALPE 0V9 SLPDDR

PP0V9_SLPDDR

CD6E0 12PF 5% 25V NP0-C0G 0201
CD6E1 3.0PF +/-0.1PF 25V NP0-C0G 0201

CALPE PCH VCORE

PPVPCORE_S5

CD6F0 12PF 5% 25V NP0-C0G 0201
CD6F1 3.0PF +/-0.1PF 25V NP0-C0G 0201

LCD BACKLIGHT DRIVER VOUT

PPVOUT_S0_LCDBKLT_F

CD600 3PF +/-0.1PF 100V C0G 0201
CD601 3PF +/-0.1PF 100V C0G 0201

PPVOUT_S0_LCDBKLT

CD6J0 3PF +/-0.1PF 100V C0G 0201
CD6J1 3PF +/-0.1PF 100V C0G 0201

EDRAM

PPVCCEDRAM_S0_CPU

CD6L0 12PF 5% 25V NP0-C0G 0201
CD6L1 3.0PF +/-0.1PF 25V NP0-C0G 0201
CD6L2 12PF 5% 25V NP0-C0G 0201
CD6L3 3.0PF +/-0.1PF 25V NP0-C0G 0201

PP3V3_G3H_RTC

CD6M0 12PF 5% 25V NP0-C0G 0201
CD6M1 3.0PF +/-0.1PF 25V NP0-C0G 0201

PPVIN_G3H_P3V3G3HRTC_R

CD6N0 12PF 5% 25V NP0-C0G 0201
CD6N1 3.0PF +/-0.1PF 25V NP0-C0G 0201

PPBUS_G3H

CD6P0 12PF 5% 25V NP0-C0G 0201
CD6P1 3.0PF +/-0.1PF 25V NP0-C0G 0201

BOM_COST_GROUP=DESENSE

SYNC_MASTER=J213_KELVIN SYNC_DATE=09/13/2018

PAGE TITLE
DESENSE 2

Apple Inc.

DRAWING NUMBER 051-04273 SIZE D
REVISION 4.0.0
BRANCH evt-1
PAGE 136 OF 500
SHEET 86 OF 98

NOTICE OF PROPRIETARY PROPERTY:
THE INFORMATION CONTAINED HEREIN IS THE PROPRIETARY PROPERTY OF APPLE INC.
THE POSESSOR AGREES TO THE FOLLOWING:
I TO MAINTAIN THIS DOCUMENT IN CONFIDENCE
II NOT TO REPRODUCE OR COPY IT
III NOT TO REVEAL OR PUBLISH IT IN WHOLE OR PART
IV ALL RIGHTS RESERVED

Vinafix.com

3V3 G3H RTC VR HIGH SIDE

63 49 PPVIN_G3H_P3V3G3HRTC
- CD700 12PF 5% 25V NP0-C0G 0201
- CD701 3.0PF +/-0.1PF 25V NP0-C0G 0201

3V3 G3H RTC VR

63 PP3V3_G3H_RTC_REG_R
- CD710 12PF 5% 25V NP0-C0G 0201
- CD711 3.0PF +/-0.1PF 25V NP0-C0G 0201

DCIN CHARGER

83 64 49 27 PPDCIN_G3H
- CD720 12PF 5% 25V NP0-C0G 0201
- CD721 3.0PF +/-0.1PF 25V NP0-C0G 0201

DCIN XA ACE2

28 27 PPDCIN_XA_G3H_F
- CD730 12PF 5% 25V NP0-C0G 0201
- CD731 3.0PF +/-0.1PF 25V NP0-C0G 0201

DCIN XB ACE2

29 27 PPDCIN_XB_G3H_F
- CD740 12PF 5% 25V NP0-C0G 0201
- CD741 3.0PF +/-0.1PF 25V NP0-C0G 0201

PBUS CHARGER

87 86 83 75 72 64 PPBUS_G3H
- CD750 12PF 5% 25V NP0-C0G 0201
- CD751 3.0PF +/-0.1PF 25V NP0-C0G 0201

PBUS CPU HIGH SIDE SENSOR

87 85 83 75 72 64 PPBUS_G3H
- CD760 12PF 5% 25V NP0-C0G 0201
- CD761 3.0PF +/-0.1PF 25V NP0-C0G 0201

PBUS RIGHT AMP SENSOR

87 85 83 75 PPBUS_G3H
- CD770 12PF 5% 25V NP0-C0G 0201
- CD771 3.0PF +/-0.1PF 25V NP0-C0G 0201

PBUS LEFT AMP SENSOR

87 86 83 75 72 64 PPBUS_G3H
- CD7K0 12PF 5% 25V NP0-C0G 0201
- CD7K1 3.0PF +/-0.1PF 25V NP0-C0G 0201

PBUS TRACKPAD

87 86 83 75 72 64 61 49 PPBUS_G3H
- CD7M0 12PF 5% 25V NP0-C0G 0201
- CD7M1 3.0PF +/-0.1PF 25V NP0-C0G 0201

5V G3S TRACKPAD

61 54 PP5V_G3S_TPAD
- CD7L0 12PF 5% 25V NP0-C0G 0201
- CD7L1 3.0PF +/-0.1PF 25V NP0-C0G 0201

CPU CORE VR LOAD SIDE

83 66 50 9 7 PPVCC_S0_CPU
- CD7B0 12PF 5% 25V NP0-C0G 0201
- CD7B1 12PF 5% 25V NP0-C0G 0201
- CD7B2 12PF 5% 25V NP0-C0G 0201
- CD7B3 12PF 5% 25V NP0-C0G 0201
- CD7B4 12PF 5% 25V NP0-C0G 0201
- CD7B5 12PF 5% 25V NP0-C0G 0201
- CD7B6 12PF 5% 25V NP0-C0G 0201
- CD7J0 3.0PF +/-0.1PF 25V NP0-C0G 0201
- CD7J1 3.0PF +/-0.1PF 25V NP0-C0G 0201
- CD7J2 3.0PF +/-0.1PF 25V NP0-C0G 0201
- CD7J3 3.0PF +/-0.1PF 25V NP0-C0G 0201
- CD7J4 3.0PF +/-0.1PF 25V NP0-C0G 0201
- CD7J5 3.0PF +/-0.1PF 25V NP0-C0G 0201
- CD7J6 3.0PF +/-0.1PF 25V NP0-C0G 0201

CPU VCCSA LOAD SIDE

83 66 52 9 7 PPVCCSA_S0_CPU
- CD7C0 12PF 5% 25V NP0-C0G 0201
- CD7C2 12PF 5% 25V NP0-C0G 0201
- CD7C3 12PF 5% 25V NP0-C0G 0201
- CD7C1 3.0PF +/-0.1PF 25V NP0-C0G 0201
- CD7C4 3.0PF +/-0.1PF 25V NP0-C0G 0201
- CD7C5 3.0PF +/-0.1PF 25V NP0-C0G 0201

CPU VCCGT LOAD SIDE

83 67 50 10 7 PPVCCGT_S0_CPU
- CD7D0 12PF 5% 25V NP0-C0G 0201
- CD7D1 12PF 5% 25V NP0-C0G 0201
- CD7D2 12PF 5% 25V NP0-C0G 0201
- CD7D3 12PF 5% 25V NP0-C0G 0201
- CD7D4 12PF 5% 25V NP0-C0G 0201
- CD7D5 12PF 5% 25V NP0-C0G 0201
- CD7D8 12PF 5% 25V NP0-C0G 0201
- CD7V0 3.0PF +/-0.1PF 25V NP0-C0G 0201
- CD7V1 3.0PF +/-0.1PF 25V NP0-C0G 0201
- CD7V2 3.0PF +/-0.1PF 25V NP0-C0G 0201
- CD7V3 3.0PF +/-0.1PF 25V NP0-C0G 0201
- CD7V4 3.0PF +/-0.1PF 25V NP0-C0G 0201
- CD7V5 3.0PF +/-0.1PF 25V NP0-C0G 0201
- CD7V8 3.0PF +/-0.1PF 25V NP0-C0G 0201

CPU VCCIO LOAD SIDE

83 73 9 7 4 PPVCCIO_S0_CPU
- CD780 12PF 5% 25V NP0-C0G 0201
- CD781 3.0PF +/-0.1PF 25V NP0-C0G 0201

VBUS XB

83 30 29 PP20V_USBC_XB_VBUS
- CD7E0 12PF 5% 25V NP0-C0G 0201
- CD7E1 12PF 5% 25V NP0-C0G
- CD7E2 12PF 5% 25V NP0-C0G 0201
- CD7E3 12PF 5% 25V NP0-C0G 0201
- CD7E4 3.0PF +/-0.1PF 25V NP0-C0G 0201
- CD7E5 3.0PF +/-0.1PF 25V NP0-C0G

VBUS XA

83 30 28 27 PP20V_USBC_XA_VBUS
- CD7F0 12PF 5% 25V NP0-C0G 0201
- CD7F4 3.0PF +/-0.1PF 25V NP0-C0G 0201

DFR 1V8 VR

83 48 46 PP1V8_DFR
- CD790 3.0PF +/-0.1PF 25V NP0-C0G 0201
- CD791 3.0PF +/-0.1PF 25V NP0-C0G 0201

CPU CORE/VCCSA/GT VR HIGH SIDE

85 73 69 67 66 65 49 43 PPBUS_HS_CPU
- CD7A0 12PF 5% 25V NP0-C0G 0201
- CD7A1 12PF 5% 25V NP0-C0G 0201
- CD7A2 12PF 5% 25V NP0-C0G 0201
- CD7A3 12PF 5% 25V NP0-C0G 0201
- CD7A4 12PF 5% 25V NP0-C0G 0201
- CD7A5 12PF 5% 25V NP0-C0G 0201
- CD7A6 12PF 5% 25V NP0-C0G 0201
- CD7A7 12PF 5% 25V NP0-C0G 0201
- CD7A8 12PF 5% 25V NP0-C0G 0201
- CD7A9 12PF 5% 25V NP0-C0G 0201
- CD7G1 12PF 5% 25V NP0-C0G 0201
- CD7G2 12PF 5% 25V NP0-C0G 0201
- CD7G3 12PF 5% 25V NP0-C0G 0201
- CD7G4 12PF 5% 25V NP0-C0G 0201
- CD7G5 12PF 5% 25V NP0-C0G 0201
- CD7H0 3.0PF +/-0.1PF 25V NP0-C0G 0201
- CD7H1 3.0PF +/-0.1PF 25V NP0-C0G 0201
- CD7H2 3.0PF +/-0.1PF 25V NP0-C0G 0201
- CD7H3 3.0PF +/-0.1PF 25V NP0-C0G 0201
- CD7H4 3.0PF +/-0.1PF 25V NP0-C0G 0201
- CD7H5 3.0PF +/-0.1PF 25V NP0-C0G 0201
- CD7H6 3.0PF +/-0.1PF 25V NP0-C0G 0201
- CD7H7 3.0PF +/-0.1PF 25V NP0-C0G 0201
- CD7H8 3.0PF +/-0.1PF 25V NP0-C0G 0201
- CD7H9 3.0PF +/-0.1PF 25V NP0-C0G 0201
- CD7I1 3.0PF +/-0.1PF 25V NP0-C0G 0201
- CD7I2 3.0PF +/-0.1PF 25V NP0-C0G 0201
- CD7I3 3.0PF +/-0.1PF 25V NP0-C0G 0201
- CD7I4 3.0PF +/-0.1PF 25V NP0-C0G 0201
- CD7I5 3.0PF +/-0.1PF 25V NP0-C0G 0201

BOM_COST_GROUP=DESENSE

SYNC_MASTER=J213_KELVIN SYNC_DATE=09/12/2018

PAGE TITLE: DESENSE 3

Apple Inc.

DRAWING NUMBER: 051-04273 SIZE: D

REVISION: 4.0.0

BRANCH: evt-1

PAGE: 137 OF 500

SHEET: 87 OF 98

NOTICE OF PROPRIETARY PROPERTY:
THE INFORMATION CONTAINED HEREIN IS THE PROPRIETARY PROPERTY OF APPLE INC.
THE POSESSOR AGREES TO THE FOLLOWING:
I TO MAINTAIN THIS DOCUMENT IN CONFIDENCE
II NOT TO REPRODUCE OR COPY IT
III NOT TO REVEAL OR PUBLISH IT IN WHOLE OR PART
IV ALL RIGHTS RESERVED

MEM 1V2 LOAD SIDE

PP1V2_S3

CD800 12PF 5% 25V NP0-C0G 0201
CD801 12PF 5% 25V NP0-C0G 0201
CD802 12PF 5% 25V NP0-C0G
CD803 12PF 5% 25V NP0-C0G 0201
CD804 12PF 5% 25V NP0-C0G 0201
CD805 12PF 5% 25V NP0-C0G 0201
CD806 12PF 5% 25V NP0-C0G
CD807 12PF 5% 25V NP0-C0G 0201

CD808 12PF 5% 25V NP0-C0G 0201
CD809 12PF 5% 25V NP0-C0G 0201
CD810 12PF 5% 25V NP0-C0G 0201
CD811 12PF 5% 25V NP0-C0G 0201
CD812 12PF 5% 25V NP0-C0G 0201
CD813 12PF 5% 25V NP0-C0G 0201
CD814 12PF 5% 25V NP0-C0G 0201
CD815 12PF 5% 25V NP0-C0G 0201

CD816 12PF 5% 25V NP0-C0G 0201
CD817 12PF 5% 25V NP0-C0G 0201
CD818 12PF 5% 25V NP0-C0G 0201
CD819 12PF 5% 25V NP0-C0G 0201
CD820 12PF 5% 25V NP0-C0G 0201
CD821 12PF 5% 25V NP0-C0G 0201
CD822 12PF 5% 25V NP0-C0G 0201
CD823 12PF 5% 25V NP0-C0G 0201

CD824 12PF 5% 25V NP0-C0G 0201
CD825 12PF 5% 25V NP0-C0G 0201
CD827 12PF 5% 25V NP0-C0G 0201
CD828 12PF 5% 25V NP0-C0G 0201

CD832 3.0PF +/-0.1PF 25V NP0-C0G 0201
CD833 3.0PF +/-0.1PF 25V NP0-C0G 0201
CD834 3.0PF +/-0.1PF 25V NP0-C0G
CD835 3.0PF +/-0.1PF 25V NP0-C0G 0201
CD836 3.0PF +/-0.1PF 25V NP0-C0G 0201
CD837 3.0PF +/-0.1PF 25V NP0-C0G 0201
CD838 3.0PF +/-0.1PF 25V NP0-C0G
CD839 3.0PF +/-0.1PF 25V NP0-C0G 0201

CD840 3.0PF +/-0.1PF 25V NP0-C0G 0201
CD841 3.0PF +/-0.1PF 25V NP0-C0G 0201
CD842 3.0PF +/-0.1PF 25V NP0-C0G 0201
CD843 3.0PF +/-0.1PF 25V NP0-C0G 0201
CD844 3.0PF +/-0.1PF 25V NP0-C0G 0201
CD845 3.0PF +/-0.1PF 25V NP0-C0G 0201
CD846 3.0PF +/-0.1PF 25V NP0-C0G 0201
CD847 3.0PF +/-0.1PF 25V NP0-C0G 0201

CD848 3.0PF +/-0.1PF 25V NP0-C0G 0201
CD849 3.0PF +/-0.1PF 25V NP0-C0G 0201
CD850 3.0PF +/-0.1PF 25V NP0-C0G 0201
CD851 3.0PF +/-0.1PF 25V NP0-C0G 0201
CD852 3.0PF +/-0.1PF 25V NP0-C0G 0201
CD853 3.0PF +/-0.1PF 25V NP0-C0G 0201
CD854 3.0PF +/-0.1PF 25V NP0-C0G 0201
CD855 3.0PF +/-0.1PF 25V NP0-C0G 0201

CD856 3.0PF +/-0.1PF 25V NP0-C0G 0201
CD857 3.0PF +/-0.1PF 25V NP0-C0G 0201
CD859 3.0PF +/-0.1PF 25V NP0-C0G 0201
CD860 3.0PF +/-0.1PF 25V NP0-C0G 0201
CD861 3.0PF +/-0.1PF 25V NP0-C0G 0201
CD862 3.0PF +/-0.1PF 25V NP0-C0G 0201
CD863 3.0PF +/-0.1PF 25V NP0-C0G 0201

CD864 3.0PF +/-0.1PF 25V NP0-C0G 0201
CD865 3.0PF +/-0.1PF 25V NP0-C0G 0201
CD866 3.0PF +/-0.1PF 25V NP0-C0G
CD867 3.0PF +/-0.1PF 25V NP0-C0G 0201

MEM 1V8 LOAD SIDE

PP1V8_S3_MEM

CD870 12PF 5% 25V NP0-C0G 0201
CD871 12PF 5% 25V NP0-C0G 0201
CD872 12PF 5% 25V NP0-C0G 0201
CD873 12PF 5% 25V NP0-C0G 0201
CD874 12PF 5% 25V NP0-C0G 0201
CD875 12PF 5% 25V NP0-C0G 0201
CD876 12PF 5% 25V NP0-C0G 0201
CD877 12PF 5% 25V NP0-C0G 0201

CD880 3.0PF +/-0.1PF 25V NP0-C0G 0201
CD881 3.0PF +/-0.1PF 25V NP0-C0G 0201
CD882 3.0PF +/-0.1PF 25V NP0-C0G 0201
CD883 3.0PF +/-0.1PF 25V NP0-C0G 0201
CD884 3.0PF +/-0.1PF 25V NP0-C0G 0201
CD885 3.0PF +/-0.1PF 25V NP0-C0G 0201
CD886 3.0PF +/-0.1PF 25V NP0-C0G 0201
CD887 3.0PF +/-0.1PF 25V NP0-C0G 0201

MEM 0V6 DDRVTT LOAD SIDE

PP0V6_S0_DDRVTT

CD890 12PF 5% 25V NP0-C0G 0201
CD891 12PF 5% 25V NP0-C0G 0201
CD892 12PF 5% 25V NP0-C0G
CD893 12PF 5% 25V NP0-C0G 0201
CD894 12PF 5% 25V NP0-C0G 0201
CD895 12PF 5% 25V NP0-C0G 0201
CD896 12PF 5% 25V NP0-C0G
CD897 12PF 5% 25V NP0-C0G 0201

CD8A0 3.0PF +/-0.1PF 25V NP0-C0G 0201
CD8A1 3.0PF +/-0.1PF 25V NP0-C0G 0201
CD8A2 3.0PF +/-0.1PF 25V NP0-C0G 0201
CD8A3 3.0PF +/-0.1PF 25V NP0-C0G 0201
CD8A4 3.0PF +/-0.1PF 25V NP0-C0G 0201
CD8A5 3.0PF +/-0.1PF 25V NP0-C0G 0201
CD8A6 3.0PF +/-0.1PF 25V NP0-C0G 0201
CD8A7 3.0PF +/-0.1PF 25V NP0-C0G 0201

CPU 1V2 LOAD SIDE

PP1V2_S3_CPUDDR

CD8B0 12PF 5% 25V NP0-C0G 0201
CD8B1 12PF 5% 25V NP0-C0G 0201
CD8B2 12PF 5% 25V NP0-C0G 0201
CD8B3 12PF 5% 25V NP0-C0G 0201

CD8C0 3.0PF +/-0.1PF 25V NP0-C0G 0201
CD8C1 3.0PF +/-0.1PF 25V NP0-C0G 0201
CD8C2 3.0PF +/-0.1PF 25V NP0-C0G 0201
CD8C3 3.0PF +/-0.1PF 25V NP0-C0G 0201

TBT X SVR

PP0V9_TBT_X_SVR

CD8H0 12PF 5% 25V NP0-C0G 0201
CD8H1 3.0PF +/-0.1PF 25V NP0-C0G 0201

TBT X S0

PP3V3_TBT_X_S0

CD8D0 12PF 5% 25V NP0-C0G 0201
CD8D1 12PF 5% 25V NP0-C0G 0201
CD8D2 3.0PF +/-0.1PF 25V NP0-C0G 0201
CD8D3 3.0PF +/-0.1PF 25V NP0-C0G 0201

EDP CONNECTOR 5V LCD

PP5V_S0SW_LCD

CD8E0 12PF 5% 25V NP0-C0G 0201
CD8E1 3.0PF +/-0.1PF 25V NP0-C0G 0201

EDP CONNECTOR 5V ALS

PP5V_G3S_ALSCAM

CD8F0 12PF 5% 25V NP0-C0G 0201
CD8F1 3.0PF +/-0.1PF 25V NP0-C0G 0201

EDP CONNECTOR 3V3 LCD

PP3V3_S0SW_LCD

CD8G0 12PF 5% 25V NP0-C0G 0201
CD8G1 3.0PF +/-0.1PF 25V NP0-C0G 0201

BOM_COST_GROUP=DESENSE

SYNC_MASTER=J213_KELVIN SYNC_DATE=09/12/2018

PAGE TITLE
DESENSE 4

Apple Inc.

DRAWING NUMBER 051-04273 SIZE D
REVISION 4.0.0
BRANCH evt-1
PAGE 138 OF 500
SHEET 88 OF 98

NOTICE OF PROPRIETARY PROPERTY:
THE INFORMATION CONTAINED HEREIN IS THE PROPRIETARY PROPERTY OF APPLE INC.
THE POSESSOR AGREES TO THE FOLLOWING:
I TO MAINTAIN THIS DOCUMENT IN CONFIDENCE
II NOT TO REPRODUCE OR COPY IT
III NOT TO REVEAL OR PUBLISH IT IN WHOLE OR PART
IV ALL RIGHTS RESERVED

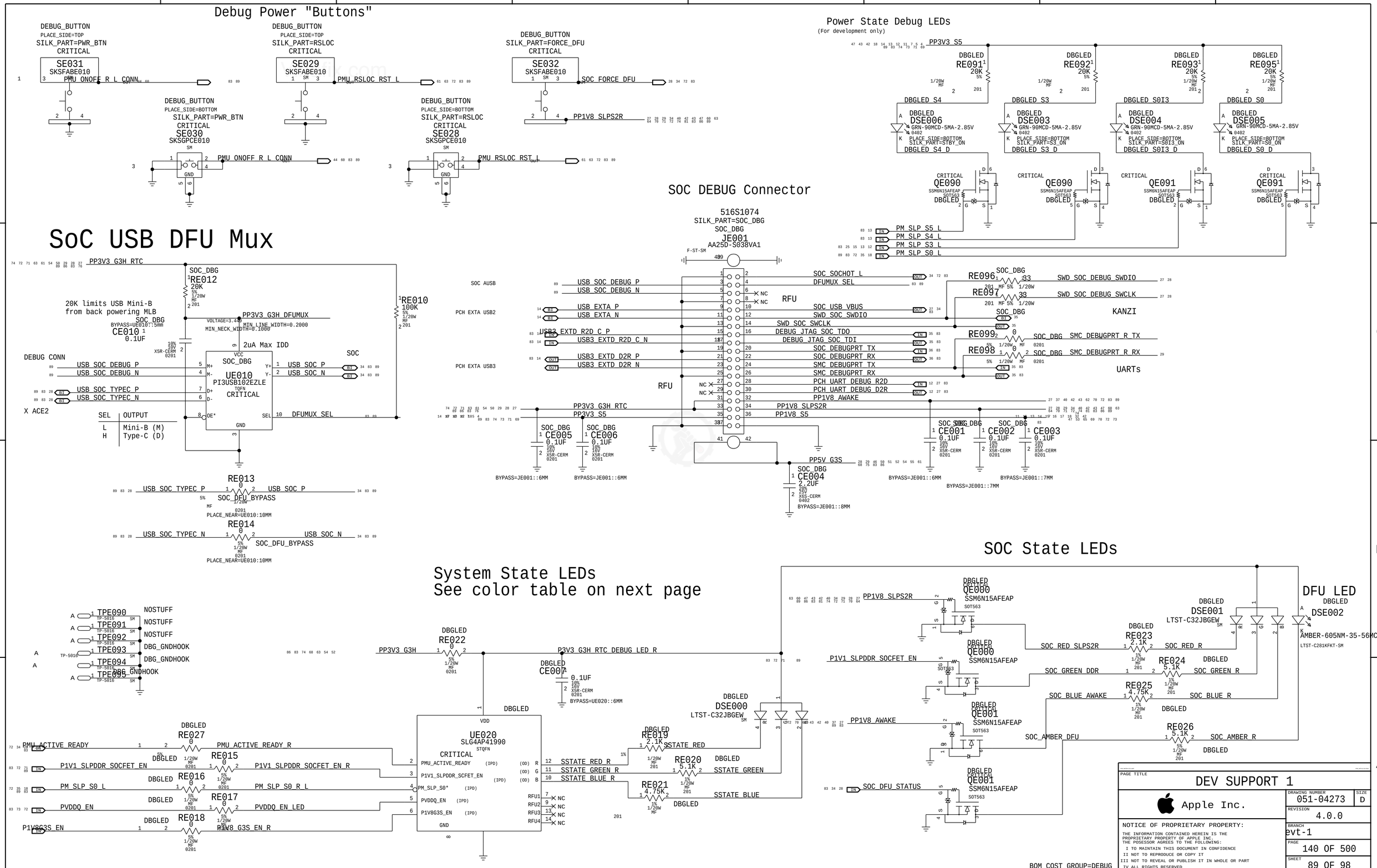
Debug Power "Buttons"
DEBUG_BUTTON
PLACE_SIDE=TOP
SILK_PART=PWR_BTN
CRITICAL
SE031
SKSFABE010
PMU_ONOFF_R_L_CONN
DEBUG_BUTTON
PLACE_SIDE=TOP
SILK_PART=RSLOC
CRITICAL
SE029
SKSFABE010
PMU_RSLOC_RST_L
DEBUG_BUTTON
SILK_PART=FORCE_DFU
CRITICAL
SE032
SKSFABE010
SOC_FORCE_DFU
PP1V8_SLPS2R
DEBUG_BUTTON
PLACE_SIDE=BOTTOM
SILK_PART=PWR_BTN
CRITICAL
SE030
SKSGPCE010
PMU_ONOFF_R_L_CONN
DEBUG_BUTTON
PLACE_SIDE=BOTTOM
SILK_PART=RSLOC
CRITICAL
SE028
SKSGPCE010
PMU_RSLOC_RST_L
Power State Debug LEDs
(For development only)
PP3V3_S5
DBGLED RE091 20K
DBGLED RE092 20K
DBGLED RE093 20K
DBGLED RE095 20K
DBGLED_S4
DBGLED_S3
DBGLED_S0I3
DBGLED_S0
DBGLED DSE006 GRN-90MCD-5MA-2.85V
DBGLED DSE003 GRN-90MCD-5MA-2.85V
DBGLED DSE004 GRN-90MCD-5MA-2.85V
DBGLED DSE005 GRN-90MCD-5MA-2.85V
PLACE_SIDE=BOTTOM SILK_PART=STBY_ON
PLACE_SIDE=BOTTOM SILK_PART=S3_ON
PLACE_SIDE=BOTTOM SILK_PART=S0I3_ON
PLACE_SIDE=BOTTOM SILK_PART=S0_ON
DBGLED_S4_D
DBGLED_S3_D
DBGLED_S0I3_D
DBGLED_S0_D
CRITICAL QE090 SSM6N15AFEAP SOT563
CRITICAL QE091 SSM6N15AFEAP SOT563
PM_SLP_S5_L
PM_SLP_S4_L
PM_SLP_S3_L
PM_SLP_S0_L
SoC USB DFU Mux
PP3V3_G3H_RTC
SOC_DBG RE012 20K
20K limits USB Mini-B
from back powering MLB
SOC_DBG CE010 0.1UF
PP3V3_G3H_DFUMUX
RE010 100K
2uA Max IDD
DEBUG CONN
USB_SOC_DEBUG_P
USB_SOC_DEBUG_N
USB_SOC_TYPEC_P
USB_SOC_TYPEC_N
X ACE2
SOC_DBG UE010 PI3USB102EZLE TQFN CRITICAL
SOC
USB_SOC_P
USB_SOC_N
DFUMUX_SEL
SEL | OUTPUT
L | Mini-B (M)
H | Type-C (D)
RE013 0 SOC_DFU_BYPASS
RE014 0 SOC_DFU_BYPASS
PLACE_NEAR=UE010:10MM
SOC DEBUG Connector
516S1074
SILK_PART=SOC_DBG
SOC_DBG
JE001
AA25D-S038VA1
F-ST-SM
SOC AUSB
PCH EXTA USB2
PCH EXTA USB3
USB_SOC_DEBUG_P
USB_SOC_DEBUG_N
USB_EXTA_P
USB_EXTA_N
USB3_EXTD_R2D_C_P
USB3_EXTD_R2D_C_N
USB3_EXTD_D2R_P
USB3_EXTD_D2R_N
SOC_SOCHOT_L
DFUMUX_SEL
SOC_USB_VBUS
SWD_SOC_SWDIO
SWD_SOC_SWCLK
DEBUG_JTAG_SOC_TDO
DEBUG_JTAG_SOC_TDI
SOC_DEBUGPRT_TX
SOC_DEBUGPRT_RX
SMC_DEBUGPRT_TX
SMC_DEBUGPRT_RX
PCH_UART_DEBUG_R2D
PCH_UART_DEBUG_D2R
PP1V8_AWAKE
PP1V8_SLPS2R
PP1V8_S5
RFU
RE096 33 SWD_SOC_DEBUG_SWDIO
RE097 33 SWD_SOC_DEBUG_SWCLK
KANZI
RE099 0 SMC_DEBUGPRT_R_TX
RE098 0 SMC_DEBUGPRT_R_RX
UARTs
PP3V3_G3H_RTC
PP3V3_S5
SOC_DBG CE005 0.1UF
SOC_DBG CE006 0.1UF
BYPASS=JE001::6MM
PP5V_G3S
SOC_DBG CE004 2.2UF
BYPASS=JE001::8MM
SOC_DBG CE001 0.1UF
SOC_DBG CE002 0.1UF
SOC_DBG CE003 0.1UF
BYPASS=JE001::7MM
System State LEDs
See color table on next page
TPE090 NOSTUFF
TPE091 NOSTUFF
TPE092 NOSTUFF
TPE093 DBG_GNDHOOK
TPE094 DBG_GNDHOOK
TPE095 DBG_GNDHOOK
PP3V3_G3H
DBGLED RE022 0
P3V3_G3H_RTC_DEBUG_LED_R
DBGLED CE007 0.1UF
BYPASS=UE020::6MM
UE020 SLG4AP41990 STQFN CRITICAL
PMU_ACTIVE_READY
P1V1_SLPDDR_SCFET_EN
PM_SLP_S0*
PVDDQ_EN
P1V8G3S_EN
SSTATE_RED_R
SSTATE_GREEN_R
SSTATE_BLUE_R
RE027 0 PMU_ACTIVE_READY_R
RE015 0 P1V1_SLPDDR_SCFET_EN_R
RE016 0 PM_SLP_S0_R_L
RE017 0 PVDDQ_EN_LED
RE018 0 P1V8G3S_EN_R
DBGLED DSE000 LTST-C32JBGEW
RE019 2.1K SSTATE_RED
RE020 5.1K SSTATE_GREEN
RE021 4.75K SSTATE_BLUE
SOC State LEDs
PP1V8_SLPS2R
P1V1_SLPDDR_SOCFET_EN
PP1V8_AWAKE
SOC_DFU_STATUS
DBGLED CRITICAL QE000 SSM6N15AFEAP SOT563
DBGLED CRITICAL QE001 SSM6N15AFEAP SOT563
SOC_RED_SLPS2R
SOC_GREEN_DDR
SOC_BLUE_AWAKE
SOC_AMBER_DFU
RE023 2.1K
RE024 5.1K
RE025 4.75K
RE026 5.1K
SOC_RED_R
SOC_GREEN_R
SOC_BLUE_R
SOC_AMBER_R
DBGLED DSE001 LTST-C32JBGEW
DFU LED
DBGLED DSE002 AMBER-605NM-35-56MCD LTST-C281KFKT-SM
BOM_COST_GROUP=DEBUG
PAGE TITLE
DEV SUPPORT 1
Apple Inc.
DRAWING NUMBER 051-04273
SIZE D
REVISION 4.0.0
BRANCH evt-1
PAGE 140 OF 500
SHEET 89 OF 98
NOTICE OF PROPRIETARY PROPERTY:
THE INFORMATION CONTAINED HEREIN IS THE PROPRIETARY PROPERTY OF APPLE INC.
THE POSESSOR AGREES TO THE FOLLOWING:
I TO MAINTAIN THIS DOCUMENT IN CONFIDENCE
II NOT TO REPRODUCE OR COPY IT
III NOT TO REVEAL OR PUBLISH IT IN WHOLE OR PART
IV ALL RIGHTS RESERVED

UE020 SAK Truth Table:

INPUTS					OUTPUTS (OD)			
PMU_ACT_RDY	SLP_SCFET_EN	SLP_SC_L	VDDQ_EN	1V8G3S_EN	R	G		COLOR
0	0	0	0	0	BLINK	1	1	Blinking Red
0	0	0	0	1	0	1	1	Red
0	0	0	1	0	0	1	0	Magenta
0	0	0	1	1	0	0	0	White
0	0	1	0	0	0	1	0	Magenta
0	0	1	0	1	0	1	0	Magenta
0	0	1	1	0	0	1	0	Magenta
0	0	1	1	1	0	1	0	Magenta
0	1	0	0	0	0	1	0	Magenta
0	1	0	0	1	0	1	0	Magenta
0	1	0	1	0	0	1	0	Magenta
0	1	0	1	1	0	1	0	Magenta
0	1	1	0	0	0	1	0	Magenta
0	1	1	0	1	0	1	0	Magenta
0	1	1	1	0	0	1	0	Magenta
0	1	1	1	1	0	1	0	Magenta
1	0	0	0	0	0	1	0	Magenta
1	0	0	0	1	0	1	0	Magenta
1	0	0	1	0	0	1	0	Magenta
1	0	0	1	1	0	1	0	Magenta
1	0	1	0	0	0	1	0	Magenta
1	0	1	0	1	0	1	0	Magenta
1	0	1	1	0	0	1	0	Magenta
1	0	1	1	1	0	1	0	Magenta
1	1	0	0	0	0	1	0	Magenta
1	1	0	0	1	0	1	0	Magenta
1	1	0	1	0	0	1	0	Magenta
1	1	0	1	1	0	1	0	Magenta
1	1	1	0	0	BLINK	0	1	Blinking Green & Yellow
1	1	1	0	1	0	0	1	Yellow
1	1	1	1	0	0	1	0	Magenta
1	1	1	1	1	1	1	0	Blue
1	1	1	1	0	0	1	0	Magenta
1	1	1	0	1	0	1	0	Magenta
1	1	1	1	0	0	1	0	Magenta
1	1	1	1	1	1	0	1	Green

BOM_COST_GROUP=DEBUG

SYNC_MASTER=J313_MOET SYNC_DATE=06/22/2018

PAGE TITLE

DEV SUPPORT 2

Apple Inc.

DRAWING NUMBER 051-04273

SIZE D

REVISION 4.0.0

BRANCH evt-1

PAGE 141 OF 500

SHEET 90 OF 98

NOTICE OF PROPRIETARY PROPERTY:
THE INFORMATION CONTAINED HEREIN IS THE PROPRIETARY PROPERTY OF APPLE INC.
THE POSESSOR AGREES TO THE FOLLOWING:
I TO MAINTAIN THIS DOCUMENT IN CONFIDENCE
II NOT TO REPRODUCE OR COPY IT
III NOT TO REVEAL OR PUBLISH IT IN WHOLE OR PART
IV ALL RIGHTS RESERVED

CPU

PART NUMBER	QTY	DESCRIPTION	REFERENCE DES	CRITICAL	BOM OPTION
337S00574	1	CPU,CFLU,SRCUU,QS,D0,2.3,28W,1.05,BGA1528	U0500	CRITICAL	CPU:28W_2P3G_SRCUU
337S00572	1	CPU,CFLU,SRCK5,QS,D0,2.7,28W,1.2,BGA1528	U0500	CRITICAL	CPU:28W_2P7G_SRCK5
337S00693	1	CPU,CFLU,QRH7,QS,D0,1.4,1.05,BGA1528	U0500	CRITICAL	CPU:15W_1P4G_QRH7
337S00692	1	CPU,CFLU,QRH6,QS,D0,1.7,1.15,BGA1528	U0500	CRITICAL	CPU:15W_1P7G_QRH6

SOC

PART NUMBER	QTY	DESCRIPTION	REFERENCE DES	CRITICAL	BOM OPTION
339S00386	1	POP,GIBRALTAR+1GB 28NM,M,DEV,SCK,CSP1122	U3900	CRITICAL	SOC:DEV_1G
339S00388	1	POP,GIBRALTAR+2GB 20NM,M,DEV,SCK,CSP1122	U3900	CRITICAL	SOC:DEV_2G
339S00601	1	POP,GIBRALTAR_L+1GB 16NM,M,B0,SCK,C1122	U3900	CRITICAL	SOC:PROD_B0_1G
339S00605	1	POP,GIBRALTAR_L+2GB 16NM,M,B0,SCK,C1122	U3900	CRITICAL	SOC:PROD_B0_2G

AMR ASSEMBLY

PART NUMBER	QTY	DESCRIPTION	REFERENCE DES	CRITICAL	BOM OPTION
677-10581	1	SUBASSY (T&R) PCBA,AMR INTERPOSER,X941	J4800	CRITICAL	AMR:POC

TBT

PART NUMBER	QTY	DESCRIPTION	REFERENCE DES	CRITICAL	BOM OPTION
338S00441	1	IC,TBT,TITAN RIDGE DP,SLMHS,PRQ,C1,CSP337	U2800	CRITICAL	TBT:TR_C1_PRQ

UPC

PART NUMBER	QTY	DESCRIPTION	REFERENCE DES	CRITICAL	BOM OPTION
353S01478	4	IC,CD3217,ACE2,A0,USB PWR SW W/HV,BGA123	U3100,U3200	CRITICAL	UPC:ACE2_A0
353S01826	4	IC,CD3217,ACE2,B1,USB PWR SW W/HV,BGA123	U3100,U3200	CRITICAL	UPC:ACE2_B1
353S01960	4	IC,CD3217,ACE2,B2,USB PWR SW W/HV,BGA123	U3100,U3200	CRITICAL	UPC:ACE2_B2

WIRELESS

PART NUMBER	QTY	DESCRIPTION	REFERENCE DES	CRITICAL	BOM OPTION
339S00586	1	MODULE,WIFI/BT,SAPPORO,ES2.1,M,LGA451	U3701	CRITICAL	MODULE:MUR__ES_2P1
339S00599	1	MODULE,WIFI/BT,SAPPORO,ES23,M,LGA451	U3701	CRITICAL	MODULE:MUR_ES_2P3
339S00616	1	MODULE,WIFI/BT,SAPPORO,ES3.1,M,LGA451	U3701	CRITICAL	MODULE:MUR_ES_3P1
339S00628	1	MODULE,WIFI/BT,SAPPORO,ES2.3,U,LGA451	U3701	CRITICAL	MODULE:USI_ES_2P3

PMU

PART NUMBER	QTY	DESCRIPTION	REFERENCE DES	CRITICAL	BOM OPTION
338S00466	1	IC,PMU,CALPE-L,D2249A0,OTP-BC,CSP324	U7800	CRITICAL	CALPE_L:OTP_BC

CHARGER IC

PART NUMBER	QTY	DESCRIPTION	REFERENCE DES	CRITICAL	BOM OPTION
353S01525	1	IC,ISL9240HIBOZ,PMU,SUONA,WCSP40,2.1X3.3	U7000	CRITICAL	CHARGER_IC:POC

DRAM

PART NUMBER	QTY	DESCRIPTION	REFERENCE DES	CRITICAL	BOM OPTION
333S00125	4	IC,SDRAM,LPDDR3-2133,16GBIT,21NM,H,BGA178	U2300,U2400,U2500,U2600	CRITICAL	DRAM:08GB_HY
333S00069	4	IC,SDRAM,LPDDR3-2133,16GBIT,20NM,BGA178	U2300,U2400,U2500,U2600	CRITICAL	DRAM:08GB_MI
333S00166	4	IC,SDRAM,LPDDR3-2133,16GBIT,20NM,BGA178	U2300,U2400,U2500,U2600	CRITICAL	DRAM:08GB_SS
333S00126	4	IC,SDRAM,LPDDR3-2133,32GBIT,21NM,H,BGA178	U2300,U2400,U2500,U2600	CRITICAL	DRAM:16GB_HY
333S00070	4	IC,SDRAM,LPDDR3-2133,32GBIT,20NM,BGA178	U2300,U2400,U2500,U2600	CRITICAL	DRAM:16GB_MI
333S00167	4	IC,SDRAM,LPDDR3-2133,32GBIT,20NM,BGA178	U2300,U2400,U2500,U2600	CRITICAL	DRAM:16GB_SS

SE

PART NUMBER	QTY	DESCRIPTION	REFERENCE DES	CRITICAL	BOM OPTION
998-11132	1	IC,RTM4,ES2.1,PN80V,DEV,UFLGA64	U5000	CRITICAL	SE:ES2P1_DEV
338S00253	1	IC,RTM4,ES2.1,PN80V,PRD,UFLGA64	U5000	CRITICAL	SE:ES2P1_PROD

BMU FLEX

PART NUMBER	QTY	DESCRIPTION	REFERENCE DES	CRITICAL	BOM OPTION
056-02919	1	MCO,FLEX,POWER,X502	BMU_FLEX	CRITICAL	BMU_FLEX:POC

OCARINA

PART NUMBER	QTY	DESCRIPTION	REFERENCE DES	CRITICAL	BOM OPTION
338S00410	1	IC,PMU,OCARINA,D2499A0,OTP-AG,WLCSP56	U9000	CRITICAL	SSD:4L

TBT ROM

PART NUMBER	QTY	DESCRIPTION	REFERENCE DES	CRITICAL	BOM OPTION
341S01197	1	IC,TBT-X (V30.2) PROTO-0,X1536	U2890	CRITICAL	TBT_ROM:P0_ACE2A0
341S01228	1	IC,TBT-X (VXXXX) NEW PROTO-0,X1536	U2890	CRITICAL	TBT_ROM:P0_ACE2B1
341S01233	1	IC,TBT-X (VXXXX) PROTO-1,X1536	U2890	CRITICAL	TBT_ROM:P1
341S01338		IC,TBT-X (VXXXX) PROTO-1,X1536	U2890	CRITICAL	TBT_ROM:EVT

BT ROM

PART NUMBER	QTY	DESCRIPTION	REFERENCE DES	CRITICAL	BOM OPTION
335S00348	1	IC,SPI SERIAL FLASH,4M BIT,1.8V,USON8	U3750	CRITICAL	BT_ROM:BLANK_WINBOND
335S00400	1	IC,SPI SERIAL FLASH,4M BIT,1.8V,USON8	U3750	CRITICAL	BT_ROM:BLANK_MACRONIX
341S01184	1	BT SFLASH ROM (V2) PROTO-0,X1536	U3750	CRITICAL	BT_ROM:P0
341S01260		ROM,BT SFLASH (VXX) PROTO-1,X1536	U3750	CRITICAL	BT_ROM:P1

WIFI ROM

PART NUMBER	QTY	DESCRIPTION	REFERENCE DES	CRITICAL	BOM OPTION
335S00214	1	IC,EEPROM,SER,UWIRE,16K,1.8V,DFN8	U3710	CRITICAL	WIFI_ROM:BLANK_ON
335S00216	1	IC,EEPROM,SER,UWIRE,16K,1.8V,DFN8	U3710	CRITICAL	WIFI_ROM:BLANK_ROHM
341S01087		IC,WIFI ROM (V00) WW1,X1421	U3710	CRITICAL	WIFI_ROM:V00

SPEAKER AMP

PART NUMBER	QTY	DESCRIPTION	REFERENCE DES	CRITICAL	BOM OPTION
353S01871	4	IC,TAS5770L,C0,CLASS D AMP,CSP30	U6400,U6450,U6500,U6550	CRITICAL	SPEAKER_AMP:C0

VR DRIVER CPU CORE

PART NUMBER	QTY	DESCRIPTION	REFERENCE DES	CRITICAL	BOM OPTION
353S00519		IC,SIC621,DR MOS,IMVP-8,60A,PQFN31,5X5MM	U7210,U7220	CRITICAL	DR_MOS_CORE:VISHAY

VR DRIVER CPU VCCSA

PART NUMBER	QTY	DESCRIPTION	REFERENCE DES	CRITICAL	BOM OPTION
353S00525	1	IC,SIC532,DR MOS,IMVP-8,30A,PQFN22,45X35	U7270	CRITICAL	DR_MOS_VCCSA:VISHAY

VR DRIVER CPU GT

PART NUMBER	QTY	DESCRIPTION	REFERENCE DES	CRITICAL	BOM OPTION
353S00519	2	IC,SIC621,DR MOS,IMVP-8,60A,PQFN31,5X5MM	U7410,U7420	CRITICAL	DR_MOS_GT:VISHAY

VR INDUCTOR VCCSA

PART NUMBER	QTY	DESCRIPTION	REFERENCE DES	CRITICAL	BOM OPTION
152S00689	1	IND,MLD,0.47UH,4.7MO,17.5A,5.6X5.2X2.4MM	L7270	CRITICAL	IND_VCCSA:CYNTEC

SYNC_MASTER=J213_JOHN SYNC_DATE=06/05/2018

PAGE TITLE
BOM CONFIGURATION

Apple Inc.

DRAWING NUMBER 051-04273 SIZE D

REVISION 4.0.0

BRANCH evt-1

PAGE 400 OF 500

SHEET 91 OF 98

NOTICE OF PROPRIETARY PROPERTY:
THE INFORMATION CONTAINED HEREIN IS THE PROPRIETARY PROPERTY OF APPLE INC.
THE POSESSOR AGREES TO THE FOLLOWING:
I TO MAINTAIN THIS DOCUMENT IN CONFIDENCE
II NOT TO REPRODUCE OR COPY IT
III NOT TO REVEAL OR PUBLISH IT IN WHOLE OR PART
IV ALL RIGHTS RESERVED

Vinafix.com

NAND U8600

PART NUMBER	QTY	DESCRIPTION	REFERENCE DES	CRITICAL	BOM OPTION
335S00377	1	NAND,3DV4,64GBT,S4E,256G,H,SLGA110	U8600	CRITICAL	NAND_U8600:2DP_HY
335S00393	1	NAND,3DV4,64GBT,S4E,256G,H,SLGA110	U8600	CRITICAL	NAND_U8600:2DP_TS
335S00388	1	NAND,3DV4,64GBT,XXX,S4E,256G,SD,SLGA110	U8600	CRITICAL	NAND_U8600:2DP_WD
335S00416	1	NAND,3DV5,64GBT,S4E,256G,SS,SLGA110	U8600	CRITICAL	NAND_U8600:2DP_SS
335S00394	1	NAND,3DV4,64GBT,S4E,256G,H,SLGA110	U8600	CRITICAL	NAND_U8600:4DP_TS
335S00378	1	NAND,3DV4,128GBT,S4E,256G,H,SLGA110	U8600	CRITICAL	NAND_U8600:4DP_HY
335S00424	1	NAND,3DV5,128GBT,S4E,256G,SS,SLGA110	U8600	CRITICAL	NAND_U8600:4DP_SS
335S00398	1	NAND,3DV4,192GBT,XXX,S4E,256G,H,SLGA110	U8600	CRITICAL	NAND_U8600:6DP_HY
335S00395	1	NAND,3DV4,192GBT,XXX,S4E,256G,T,SLGA110	U8600	CRITICAL	NAND_U8600:6DP_TS
335S00379	1	NAND,3DV4,256GBT,S4E,256G,H,SLGA110	U8600	CRITICAL	NAND_U8600:8DP_HY
335S00327	1	NAND,3DV3,256GBP,133,S4E,170G,SD,ULGA110	U8600	CRITICAL	NAND_U8600:8DP_WD
335S00396	1	NAND,3DV4,256GBT,XXX,S4E,256G,T,SLGA110	U8600	CRITICAL	NAND_U8600:8DP_TS
335S00399	1	NAND,3DV4,320GBT,XXX,S4E,256G,H,SLGA110	U8600	CRITICAL	NAND_U8600:10DP_HY
335S00397	1	NAND,3DV4,320GBT,XXX,S4E,256G,T,SLGA110	U8600	CRITICAL	NAND_U8600:10DP_TS
335S00380	1	NAND,3DV4,512GBT,S4E,256G,H,SLGA110	U8600	CRITICAL	NAND_U8600:16DP_HY
335S00391	1	NAND,3DV4,512GBT,XXX,S4E,256G,SD,SLGA110	U8600	CRITICAL	NAND_U8600:16DP_WD

NAND U8700

PART NUMBER	QTY	DESCRIPTION	REFERENCE DES	CRITICAL	BOM OPTION
335S00377	1	NAND,3DV4,64GBT,S4E,256G,H,SLGA110	U8700	CRITICAL	NAND_U8700:2DP_HY
335S00393	1	NAND,3DV4,64GBT,S4E,256G,H,SLGA110	U8700	CRITICAL	NAND_U8700:2DP_TS
335S00388	1	NAND,3DV4,64GBT,XXX,S4E,256G,SD,SLGA110	U8700	CRITICAL	NAND_U8700:2DP_WD
335S00416	1	NAND,3DV5,64GBT,S4E,256G,SS,SLGA110	U8700	CRITICAL	NAND_U8700:2DP_SS
335S00394	1	NAND,3DV4,64GBT,S4E,256G,H,SLGA110	U8700	CRITICAL	NAND_U8700:4DP_TS
335S00378	1	NAND,3DV4,128GBT,S4E,256G,H,SLGA110	U8700	CRITICAL	NAND_U8700:4DP_HY
335S00424	1	NAND,3DV5,128GBT,S4E,256G,SS,SLGA110	U8700	CRITICAL	NAND_U8700:4DP_SS
335S00398	1	NAND,3DV4,192GBT,XXX,S4E,256G,H,SLGA110	U8700	CRITICAL	NAND_U8700:6DP_HY
335S00395	1	NAND,3DV4,192GBT,XXX,S4E,256G,T,SLGA110	U8700	CRITICAL	NAND_U8700:6DP_TS
335S00379	1	NAND,3DV4,256GBT,S4E,256G,H,SLGA110	U8700	CRITICAL	NAND_U8700:8DP_HY
335S00327	1	NAND,3DV3,256GBP,133,S4E,170G,SD,ULGA110	U8700	CRITICAL	NAND_U8700:8DP_WD
335S00396	1	NAND,3DV4,256GBT,XXX,S4E,256G,T,SLGA110	U8700	CRITICAL	NAND_U8700:8DP_TS
335S00399	1	NAND,3DV4,320GBT,XXX,S4E,256G,H,SLGA110	U8700	CRITICAL	NAND_U8700:10DP_HY
335S00397	1	NAND,3DV4,320GBT,XXX,S4E,256G,T,SLGA110	U8700	CRITICAL	NAND_U8700:10DP_TS
335S00380	1	NAND,3DV4,512GBT,S4E,256G,H,SLGA110	U8700	CRITICAL	NAND_U8700:16DP_HY
335S00391	1	NAND,3DV4,512GBT,XXX,S4E,256G,SD,SLGA110	U8700	CRITICAL	NAND_U8700:16DP_WD

NAND U8800

PART NUMBER	QTY	DESCRIPTION	REFERENCE DES	CRITICAL	BOM OPTION
335S00377	1	NAND,3DV4,64GBT,S4E,256G,H,SLGA110	U8800	CRITICAL	NAND_U8800:2DP_HY
335S00393	1	NAND,3DV4,64GBT,S4E,256G,H,SLGA110	U8800	CRITICAL	NAND_U8800:2DP_TS
335S00388	1	NAND,3DV4,64GBT,XXX,S4E,256G,SD,SLGA110	U8800	CRITICAL	NAND_U8800:2DP_WD
335S00416	1	NAND,3DV5,64GBT,S4E,256G,SS,SLGA110	U8800	CRITICAL	NAND_U8800:2DP_SS
335S00394	1	NAND,3DV4,64GBT,S4E,256G,H,SLGA110	U8800	CRITICAL	NAND_U8800:4DP_TS
335S00378	1	NAND,3DV4,128GBT,S4E,256G,H,SLGA110	U8800	CRITICAL	NAND_U8800:4DP_HY
335S00424	1	NAND,3DV5,128GBT,S4E,256G,SS,SLGA110	U8800	CRITICAL	NAND_U8800:4DP_SS
335S00398	1	NAND,3DV4,192GBT,XXX,S4E,256G,H,SLGA110	U8800	CRITICAL	NAND_U8800:6DP_HY
335S00395	1	NAND,3DV4,192GBT,XXX,S4E,256G,T,SLGA110	U8800	CRITICAL	NAND_U8800:6DP_TS
335S00379	1	NAND,3DV4,256GBT,S4E,256G,H,SLGA110	U8800	CRITICAL	NAND_U8800:8DP_HY
335S00327	1	NAND,3DV3,256GBP,133,S4E,170G,SD,ULGA110	U8800	CRITICAL	NAND_U8800:8DP_WD
335S00396	1	NAND,3DV4,256GBT,XXX,S4E,256G,T,SLGA110	U8800	CRITICAL	NAND_U8800:8DP_TS
335S00399	1	NAND,3DV4,320GBT,XXX,S4E,256G,H,SLGA110	U8800	CRITICAL	NAND_U8800:10DP_HY
335S00397	1	NAND,3DV4,320GBT,XXX,S4E,256G,T,SLGA110	U8800	CRITICAL	NAND_U8800:10DP_TS
335S00380	1	NAND,3DV4,512GBT,S4E,256G,H,SLGA110	U8800	CRITICAL	NAND_U8800:16DP_HY
335S00391	1	NAND,3DV4,512GBT,XXX,S4E,256G,SD,SLGA110	U8800	CRITICAL	NAND_U8800:16DP_WD

NAND U8900

PART NUMBER	QTY	DESCRIPTION	REFERENCE DES	CRITICAL	BOM OPTION
335S00377	1	NAND,3DV4,64GBT,S4E,256G,H,SLGA110	U8900	CRITICAL	NAND_U8900:2DP_HY
335S00393	1	NAND,3DV4,64GBT,S4E,256G,H,SLGA110	U8900	CRITICAL	NAND_U8900:2DP_TS
335S00388	1	NAND,3DV4,64GBT,XXX,S4E,256G,SD,SLGA110	U8900	CRITICAL	NAND_U8900:2DP_WD
335S00416	1	NAND,3DV5,64GBT,S4E,256G,SS,SLGA110	U8900	CRITICAL	NAND_U8900:2DP_SS
335S00394	1	NAND,3DV4,64GBT,S4E,256G,H,SLGA110	U8900	CRITICAL	NAND_U8900:4DP_TS
335S00378	1	NAND,3DV4,128GBT,S4E,256G,H,SLGA110	U8900	CRITICAL	NAND_U8900:4DP_HY
335S00424	1	NAND,3DV5,128GBT,S4E,256G,SS,SLGA110	U8900	CRITICAL	NAND_U8900:4DP_SS
335S00398	1	NAND,3DV4,192GBT,XXX,S4E,256G,H,SLGA110	U8900	CRITICAL	NAND_U8900:6DP_HY
335S00395	1	NAND,3DV4,192GBT,XXX,S4E,256G,T,SLGA110	U8900	CRITICAL	NAND_U8900:6DP_TS
335S00379	1	NAND,3DV4,256GBT,S4E,256G,H,SLGA110	U8900	CRITICAL	NAND_U8900:8DP_HY
335S00327	1	NAND,3DV3,256GBP,133,S4E,170G,SD,ULGA110	U8900	CRITICAL	NAND_U8900:8DP_WD
335S00396	1	NAND,3DV4,256GBT,XXX,S4E,256G,T,SLGA110	U8900	CRITICAL	NAND_U8900:8DP_TS
335S00399	1	NAND,3DV4,320GBT,XXX,S4E,256G,H,SLGA110	U8900	CRITICAL	NAND_U8900:10DP_HY
335S00397	1	NAND,3DV4,320GBT,XXX,S4E,256G,T,SLGA110	U8900	CRITICAL	NAND_U8900:10DP_TS
335S00380	1	NAND,3DV4,512GBT,S4E,256G,H,SLGA110	U8900	CRITICAL	NAND_U8900:16DP_HY
335S00391	1	NAND,3DV4,512GBT,XXX,S4E,256G,SD,SLGA110	U8900	CRITICAL	NAND_U8900:16DP_WD

SYNC_MASTER=J213_JOHN SYNC_DATE=06/05/2018

PAGE TITLE
BOM CONFIGURATION

Apple Inc.

DRAWING NUMBER 051-04273 SIZE D

REVISION 4.0.0

BRANCH evt-1

PAGE 401 OF 500

SHEET 92 OF 98

NOTICE OF PROPRIETARY PROPERTY:
THE INFORMATION CONTAINED HEREIN IS THE PROPRIETARY PROPERTY OF APPLE INC.
THE POSESSOR AGREES TO THE FOLLOWING:
I TO MAINTAIN THIS DOCUMENT IN CONFIDENCE
II NOT TO REPRODUCE OR COPY IT
III NOT TO REVEAL OR PUBLISH IT IN WHOLE OR PART
IV ALL RIGHTS RESERVED

COMMON BOM GROUPS

BOM GROUP	BOM OPTIONS
X1536_COMMON_PARTS	SCH,PCB,ALT_CMN,COMMON,ALTERNATE:PART,X1536_USB,X1536_WIRELESS,X1536_X86,X1536_MISC,X1536_T290
X1536_USB	TBT:TR_C1_PRQ,UPC:ACE2_B2,TBT_ROM:EVT
X1536_WIRELESS	MODULE:MUR_ES_3P1,WIFI_ROM:V00,BT_ROM:P1
X1536_X86	EDP_ENABLE,DR_MOS_CORE:VISHAY,DR_MOS_VCCSA:VISHAY,DR_MOS_GT:VISHAY,IND_VCCSA:CYNTEC
X1536_T290	BOARDID3,BOARDID4,BOOTCFG0,BOARDREV1,CALPE_L:OTP_BC,SE:ES2P1_PROD,NAND_VCC:2.5V
X1536_MISC	CHARGER_IC:POC,AMR:POC,BMU_FLEX:POC,SPEAKER_AMP:C0

DEBUG BOM PARTS

BOM GROUP	BOM OPTIONS
X1536_DEV_1	ALT_CMN,ALTERNATE:PART,DBGLED,DBG_FAN,DEBUG_BUTTON,ESPI_DBG,SENSOR:DEV,XDP:YES,XDP_CONN:YES
X1536_DEV_2	SSD_DBG,LOADISNS,LOADRC:YES,USBC_AARDVARKANOID,USBC_ARKANOID,SOC_DBG,DBG_GNDHOOK,WIFI_DBG

DRAM AND SPD

BOM GROUP	BOM OPTIONS
X1536_08GB_HY	DRAM:08GB_HY,RAMCFG4_L,RAMCFG3_L,RAMCFG2_L,RAMCFG1_L,RAMCFG0_L
X1536_08GB_MI	DRAM:08GB_MI,RAMCFG4_L,RAMCFG3_L,RAMCFG2_L,RAMCFG1_L
X1536_08GB_SS	DRAM:08GB_SS,RAMCFG3_L,RAMCFG2_L,RAMCFG0_L
X1536_16GB_HY	DRAM:16GB_HY,RAMCFG4_L,RAMCFG3_L,RAMCFG1_L,RAMCFG0_L
X1536_16GB_MI	DRAM:16GB_MI,RAMCFG4_L,RAMCFG3_L,RAMCFG1_L
X1536_16GB_SS	DRAM:16GB_SS,RAMCFG3_L,RAMCFG0_L
X1536_NO_DRAM	DRAM:OFF

CPU

BOM GROUP	BOM OPTIONS
X1536_CPU_1P4GHZ	CPU:15W_1P4G_QRH7
X1536_CPU_1P7GHZ	CPU:15W_1P7G_QRH6
X1536_CPU_NO_CPU	CPU:OFF

SOC AND NAND

BOM GROUP	BOM OPTIONS
X1536_TLC_128GB_HY	SOC:PROD_B0_1G,SSD:2L,NAND_U8600:2DP_HY,NAND_U8700:2DP_HY
X1536_TLC_128GB_TS	SOC:PROD_B0_1G,SSD:2L,NAND_U8600:2DP_TS,NAND_U8700:2DP_TS
X1536_TLC_256GB_HY	SOC:PROD_B0_1G,SSD:4L,NAND_U8600:4DP_HY,NAND_U8700:2DP_HY,NAND_U8800:2DP_HY,NAND_U8900:2DP_HY
X1536_TLC_256GB_TS	SOC:PROD_B0_1G,SSD:4L,NAND_U8600:4DP_TS,NAND_U8700:2DP_TS,NAND_U8800:2DP_TS,NAND_U8900:2DP_TS
X1536_TLC_256GB_SS	SOC:PROD_B0_1G,SSD:4L,NAND_U8600:4DP_SS,NAND_U8700:2DP_SS,NAND_U8800:2DP_SS,NAND_U8900:2DP_SS
X1536_TLC_512GB_HY	SOC:PROD_B0_1G,SSD:4L,NAND_U8600:6DP_HY,NAND_U8700:6DP_HY,NAND_U8800:4DP_HY,NAND_U8900:4DP_HY
X1536_TLC_512GB_TS	SOC:PROD_B0_1G,SSD:4L,NAND_U8600:6DP_TS,NAND_U8700:6DP_TS,NAND_U8800:4DP_TS,NAND_U8900:4DP_TS
X1536_TLC_001TB_HY	SOC:PROD_B0_2G,SSD:4L,NAND_U8600:10DP_HY,NAND_U8700:10DP_HY,NAND_U8800:8DP_HY,NAND_U8900:8DP_HY
X1536_TLC_001TB_TS	SOC:PROD_B0_2G,SSD:4L,NAND_U8600:10DP_TS,NAND_U8700:10DP_TS,NAND_U8800:8DP_TS,NAND_U8900:8DP_TS
X1536_TLC_002TB_HY	SOC:PROD_B0_2G,SSD:4L,NAND_U8600:16DP_HY,NAND_U8700:16DP_HY,NAND_U8800:16DP_HY,NAND_U8900:16DP_HY
X1536_TLC_002TB_WD	SOC:PROD_B0_2G,SSD:4L,NAND_U8600:16DP_WD,NAND_U8700:16DP_WD,NAND_U8800:16DP_WD,NAND_U8900:16DP_WD
X1536_NO_NAND_2_LD	SOC:PROD_B0_2G,SSD:2L,NAND_U8600:OFF,NAND_U8700:OFF,NAND_U8800:OFF,NAND_U8900:OFF
X1536_NO_NAND_4_LD	SOC:PROD_B0_2G,SSD:4L,NAND_U8600:OFF,NAND_U8700:OFF,NAND_U8800:OFF,NAND_U8900:OFF

SYSTEM PARTS

PART NUMBER	QTY	DESCRIPTION	REFERENCE DES	CRITICAL	BOM OPTION
051-04273	1	SCHEM,MLB COFFEE,X1536	SCH	CRITICAL	SCH
820-01598	1	PCBF,MLB COFFEE,X1536	PCB	CRITICAL	PCB
685-00257	1	COMMON PARTS,MLB COFFEE,X1536	COMMON_PARTS	CRITICAL	X1536_COMMON_BOM
985-00796	1	DEV,COMMON PARTS,MLB COFFEE,X1536	DEV_PARTS	CRITICAL	X1536_DEV_BOM

TOP LEVEL BOM

639-XXXX (POR) OR 939-XXXX (DEV)

COMMON PARTS BOM

685-00257

DEBUG PARTS BOM

985-00796

COMMON PARTS BOM

BOM NUMBER	BOM NAME	BOM OPTIONS
685-00257	COMMON_PARTS,MLB COFFEE,X1536	X1536_COMMON_PARTS

DEBUG PARTS

BOM NUMBER	BOM NAME	BOM OPTIONS
985-00796	DEV,COMMON_PARTS,MLB COFFEE,X1536	X1536_DEV_1,X1536_DEV_2

NOTES:

"SENSOR:DEV" IS FOR SENSE RESISTORS. WHEN CURRENT SENSING IS REMOVED AT DVT, THESE RESISTORS WILL BE REPLACED WITH A SPECIAL SYMBOL, A COPPER SHAPE SHORTING THE TWO TERMINALS

"LOADISNS" ARE CIRCUITS ONLY REQUIRED UNTIL DVT TO MEASURE/SENSE CURRENT. SENSE CIRCUITS REQUIRED BY SMC WILL NOT HAVE THIS OPTION SINCE THEY WILL STAY TILL PVT

"LOADRC:YES/NO" RC FILTERS INTO ADC WILL BE REPLACED BY 100K PD ONCE THE SENSE CIRCUITS GO AWAY

CPU DRAM CFG[4:0] CHART

DIE REV	CFG 4
A	0
B	1

SPEED	CFG 3
2133	0
1866	1

CAPACITY	CFG 2
8GB	0
16GB	1

VENDOR	CFG 1	CFG 0
HYNIX	0	0
MICRON	0 1	
SAMSUNG	1 0	
N/A	1	1

SYNC_MASTER=J213_JOHN SYNC_DATE=06/05/2018

PAGE TITLE

BOM GROUPS

Apple Inc.

DRAWING NUMBER 051-04273 SIZE D

REVISION 4.0.0

BRANCH evt-1

PAGE 403 OF 500

SHEET 93 OF 98

NOTICE OF PROPRIETARY PROPERTY:
THE INFORMATION CONTAINED HEREIN IS THE PROPRIETARY PROPERTY OF APPLE INC.
THE POSESSOR AGREES TO THE FOLLOWING:
I TO MAINTAIN THIS DOCUMENT IN CONFIDENCE
II NOT TO REPRODUCE OR COPY IT
III NOT TO REVEAL OR PUBLISH IT IN WHOLE OR PART
IV ALL RIGHTS RESERVED

POR BOMS - MLB1 (2.3 GHZ CPU)

BOM NUMBER	BOM NAME	BOM OPTIONS
639-06731	MLB1,HY-8GB,HY-128GB,X1536	ALT_CMN,ALTERNATE:PART,X1536_COMMON_BOM,X1536_DEV_BOM,X1536_CPU_1P4GHZ,X1536_08GB_HY,X1536_TLC_128GB_HY
639-06732	MLB1,HY-16GB,HY-128GB,X1536	ALT_CMN,ALTERNATE:PART,X1536_COMMON_BOM,X1536_DEV_BOM,X1536_CPU_1P4GHZ,X1536_16GB_HY,X1536_TLC_128GB_HY
639-06733	MLB1,MI-8GB,HY-128GB,X1536	ALT_CMN,ALTERNATE:PART,X1536_COMMON_BOM,X1536_DEV_BOM,X1536_CPU_1P4GHZ,X1536_08GB_MI,X1536_TLC_128GB_HY
639-06734	MLB1,MI-16GB,HY-128GB,X1536	ALT_CMN,ALTERNATE:PART,X1536_COMMON_BOM,X1536_DEV_BOM,X1536_CPU_1P4GHZ,X1536_16GB_MI,X1536_TLC_128GB_HY
639-06735	MLB1,SS-8GB,HY-128GB,X1536	ALT_CMN,ALTERNATE:PART,X1536_COMMON_BOM,X1536_DEV_BOM,X1536_CPU_1P4GHZ,X1536_08GB_SS,X1536_TLC_128GB_HY
639-06736	MLB1,SS-16GB,HY-128GB,X1536	ALT_CMN,ALTERNATE:PART,X1536_COMMON_BOM,X1536_DEV_BOM,X1536_CPU_1P4GHZ,X1536_16GB_SS,X1536_TLC_128GB_HY
639-07155	MLB1,HY-8GB,TS-128GB,X1536	ALT_CMN,ALTERNATE:PART,X1536_COMMON_BOM,X1536_DEV_BOM,X1536_CPU_1P4GHZ,X1536_08GB_HY,X1536_TLC_128GB_TS
639-07156	MLB1,HY-16GB,TS-128GB,X1536	ALT_CMN,ALTERNATE:PART,X1536_COMMON_BOM,X1536_DEV_BOM,X1536_CPU_1P4GHZ,X1536_16GB_HY,X1536_TLC_128GB_TS
639-07157	MLB1,MI-8GB,TS-128GB,X1536	ALT_CMN,ALTERNATE:PART,X1536_COMMON_BOM,X1536_DEV_BOM,X1536_CPU_1P4GHZ,X1536_08GB_MI,X1536_TLC_128GB_TS
639-07158	MLB1,MI-16GB,TS-128GB,X1536	ALT_CMN,ALTERNATE:PART,X1536_COMMON_BOM,X1536_DEV_BOM,X1536_CPU_1P4GHZ,X1536_16GB_MI,X1536_TLC_128GB_TS
639-07159	MLB1,SS-8GB,TS-128GB,X1536	ALT_CMN,ALTERNATE:PART,X1536_COMMON_BOM,X1536_DEV_BOM,X1536_CPU_1P4GHZ,X1536_08GB_SS,X1536_TLC_128GB_TS
639-07160	MLB1,SS-16GB,TS-128GB,X1536	ALT_CMN,ALTERNATE:PART,X1536_COMMON_BOM,X1536_DEV_BOM,X1536_CPU_1P4GHZ,X1536_16GB_SS,X1536_TLC_128GB_TS
639-06737	MLB1,HY-8GB,HY-256GB,X1536	ALT_CMN,ALTERNATE:PART,X1536_COMMON_BOM,X1536_DEV_BOM,X1536_CPU_1P4GHZ,X1536_08GB_HY,X1536_TLC_256GB_HY
639-06738	MLB1,HY-16GB,HY-256GB,X1536	ALT_CMN,ALTERNATE:PART,X1536_COMMON_BOM,X1536_DEV_BOM,X1536_CPU_1P4GHZ,X1536_16GB_HY,X1536_TLC_256GB_HY
639-06739	MLB1,MI-8GB,HY-256GB,X1536	ALT_CMN,ALTERNATE:PART,X1536_COMMON_BOM,X1536_DEV_BOM,X1536_CPU_1P4GHZ,X1536_08GB_MI,X1536_TLC_256GB_HY
639-06740	MLB1,MI-16GB,HY-256GB,X1536	ALT_CMN,ALTERNATE:PART,X1536_COMMON_BOM,X1536_DEV_BOM,X1536_CPU_1P4GHZ,X1536_16GB_MI,X1536_TLC_256GB_HY
639-06741	MLB1,SS-8GB,HY-256GB,X1536	ALT_CMN,ALTERNATE:PART,X1536_COMMON_BOM,X1536_DEV_BOM,X1536_CPU_1P4GHZ,X1536_08GB_SS,X1536_TLC_256GB_HY
639-06742	MLB1,SS-16GB,HY-256GB,X1536	ALT_CMN,ALTERNATE:PART,X1536_COMMON_BOM,X1536_DEV_BOM,X1536_CPU_1P4GHZ,X1536_16GB_SS,X1536_TLC_256GB_HY
639-07161	MLB1,HY-8GB,TS-256GB,X1536	ALT_CMN,ALTERNATE:PART,X1536_COMMON_BOM,X1536_DEV_BOM,X1536_CPU_1P4GHZ,X1536_08GB_HY,X1536_TLC_256GB_TS
639-07162	MLB1,HY-16GB,TS-256GB,X1536	ALT_CMN,ALTERNATE:PART,X1536_COMMON_BOM,X1536_DEV_BOM,X1536_CPU_1P4GHZ,X1536_16GB_HY,X1536_TLC_256GB_TS
639-07163	MLB1,MI-8GB,TS-256GB,X1536	ALT_CMN,ALTERNATE:PART,X1536_COMMON_BOM,X1536_DEV_BOM,X1536_CPU_1P4GHZ,X1536_08GB_MI,X1536_TLC_256GB_TS
639-07164	MLB1,MI-16GB,TS-256GB,X1536	ALT_CMN,ALTERNATE:PART,X1536_COMMON_BOM,X1536_DEV_BOM,X1536_CPU_1P4GHZ,X1536_16GB_MI,X1536_TLC_256GB_TS
639-07165	MLB1,SS-8GB,TS-256GB,X1536	ALT_CMN,ALTERNATE:PART,X1536_COMMON_BOM,X1536_DEV_BOM,X1536_CPU_1P4GHZ,X1536_08GB_SS,X1536_TLC_256GB_TS
639-07166	MLB1,SS-16GB,TS-256GB,X1536	ALT_CMN,ALTERNATE:PART,X1536_COMMON_BOM,X1536_DEV_BOM,X1536_CPU_1P4GHZ,X1536_16GB_SS,X1536_TLC_256GB_TS
639-06743	MLB1,HY-8GB,HY-512GB,X1536	ALT_CMN,ALTERNATE:PART,X1536_COMMON_BOM,X1536_DEV_BOM,X1536_CPU_1P4GHZ,X1536_08GB_HY,X1536_TLC_512GB_HY
639-06744	MLB1,HY-16GB,HY-512GB,X1536	ALT_CMN,ALTERNATE:PART,X1536_COMMON_BOM,X1536_DEV_BOM,X1536_CPU_1P4GHZ,X1536_16GB_HY,X1536_TLC_512GB_HY
639-06745	MLB1,MI-8GB,HY-512GB,X1536	ALT_CMN,ALTERNATE:PART,X1536_COMMON_BOM,X1536_DEV_BOM,X1536_CPU_1P4GHZ,X1536_08GB_MI,X1536_TLC_512GB_HY
639-06746	MLB1,MI-16GB,HY-512GB,X1536	ALT_CMN,ALTERNATE:PART,X1536_COMMON_BOM,X1536_DEV_BOM,X1536_CPU_1P4GHZ,X1536_16GB_MI,X1536_TLC_512GB_HY
639-06747	MLB1,SS-8GB,HY-512GB,X1536	ALT_CMN,ALTERNATE:PART,X1536_COMMON_BOM,X1536_DEV_BOM,X1536_CPU_1P4GHZ,X1536_08GB_SS,X1536_TLC_512GB_HY
639-06748	MLB1,SS-16GB,HY-512GB,X1536	ALT_CMN,ALTERNATE:PART,X1536_COMMON_BOM,X1536_DEV_BOM,X1536_CPU_1P4GHZ,X1536_16GB_SS,X1536_TLC_512GB_HY
639-07167	MLB1,HY-8GB,TS-512GB,X1536	ALT_CMN,ALTERNATE:PART,X1536_COMMON_BOM,X1536_DEV_BOM,X1536_CPU_1P4GHZ,X1536_08GB_HY,X1536_TLC_512GB_TS
639-07168	MLB1,HY-16GB,TS-512GB,X1536	ALT_CMN,ALTERNATE:PART,X1536_COMMON_BOM,X1536_DEV_BOM,X1536_CPU_1P4GHZ,X1536_16GB_HY,X1536_TLC_512GB_TS
639-07169	MLB1,MI-8GB,TS-512GB,X1536	ALT_CMN,ALTERNATE:PART,X1536_COMMON_BOM,X1536_DEV_BOM,X1536_CPU_1P4GHZ,X1536_08GB_MI,X1536_TLC_512GB_TS
639-07170	MLB1,MI-16GB,TS-512GB,X1536	ALT_CMN,ALTERNATE:PART,X1536_COMMON_BOM,X1536_DEV_BOM,X1536_CPU_1P4GHZ,X1536_16GB_MI,X1536_TLC_512GB_TS
639-07171	MLB1,SS-8GB,TS-512GB,X1536	ALT_CMN,ALTERNATE:PART,X1536_COMMON_BOM,X1536_DEV_BOM,X1536_CPU_1P4GHZ,X1536_08GB_SS,X1536_TLC_512GB_TS
639-07172	MLB1,SS-16GB,TS-512GB,X1536	ALT_CMN,ALTERNATE:PART,X1536_COMMON_BOM,X1536_DEV_BOM,X1536_CPU_1P4GHZ,X1536_16GB_SS,X1536_TLC_512GB_TS
639-06749	MLB1,HY-8GB,HY-1TB,X1536	ALT_CMN,ALTERNATE:PART,X1536_COMMON_BOM,X1536_DEV_BOM,X1536_CPU_1P4GHZ,X1536_08GB_HY,X1536_TLC_001TB_HY
639-06750	MLB1,HY-16GB,HY-1TB,X1536	ALT_CMN,ALTERNATE:PART,X1536_COMMON_BOM,X1536_DEV_BOM,X1536_CPU_1P4GHZ,X1536_16GB_HY,X1536_TLC_001TB_HY
639-06751	MLB1,MI-8GB,HY-1TB,X1536	ALT_CMN,ALTERNATE:PART,X1536_COMMON_BOM,X1536_DEV_BOM,X1536_CPU_1P4GHZ,X1536_08GB_MI,X1536_TLC_001TB_HY
639-06752	MLB1,MI-16GB,HY-1TB,X1536	ALT_CMN,ALTERNATE:PART,X1536_COMMON_BOM,X1536_DEV_BOM,X1536_CPU_1P4GHZ,X1536_16GB_MI,X1536_TLC_001TB_HY
639-06753	MLB1,SS-8GB,HY-1TB,X1536	ALT_CMN,ALTERNATE:PART,X1536_COMMON_BOM,X1536_DEV_BOM,X1536_CPU_1P4GHZ,X1536_08GB_SS,X1536_TLC_001TB_HY
639-06754	MLB1,SS-16GB,HY-1TB,X1536	ALT_CMN,ALTERNATE:PART,X1536_COMMON_BOM,X1536_DEV_BOM,X1536_CPU_1P4GHZ,X1536_16GB_SS,X1536_TLC_001TB_HY
639-07173	MLB1,HY-8GB,TS-1TB,X1536	ALT_CMN,ALTERNATE:PART,X1536_COMMON_BOM,X1536_DEV_BOM,X1536_CPU_1P4GHZ,X1536_08GB_HY,X1536_TLC_001TB_TS
639-07174	MLB1,HY-16GB,TS-1TB,X1536	ALT_CMN,ALTERNATE:PART,X1536_COMMON_BOM,X1536_DEV_BOM,X1536_CPU_1P4GHZ,X1536_16GB_HY,X1536_TLC_001TB_TS
639-07175	MLB1,MI-8GB,TS-1TB,X1536	ALT_CMN,ALTERNATE:PART,X1536_COMMON_BOM,X1536_DEV_BOM,X1536_CPU_1P4GHZ,X1536_08GB_MI,X1536_TLC_001TB_TS
639-07176	MLB1,MI-16GB,TS-1TB,X1536	ALT_CMN,ALTERNATE:PART,X1536_COMMON_BOM,X1536_DEV_BOM,X1536_CPU_1P4GHZ,X1536_16GB_MI,X1536_TLC_001TB_TS
639-07177	MLB1,SS-8GB,TS-1TB,X1536	ALT_CMN,ALTERNATE:PART,X1536_COMMON_BOM,X1536_DEV_BOM,X1536_CPU_1P4GHZ,X1536_08GB_SS,X1536_TLC_001TB_TS
639-07178	MLB1,SS-16GB,TS-1TB,X1536	ALT_CMN,ALTERNATE:PART,X1536_COMMON_BOM,X1536_DEV_BOM,X1536_CPU_1P4GHZ,X1536_16GB_SS,X1536_TLC_001TB_TS
639-06755	MLB1,HY-8GB,HY-2TB,X1536	ALT_CMN,ALTERNATE:PART,X1536_COMMON_BOM,X1536_DEV_BOM,X1536_CPU_1P4GHZ,X1536_08GB_HY,X1536_TLC_002TB_HY
639-06756	MLB1,HY-16GB,HY-2TB,X1536	ALT_CMN,ALTERNATE:PART,X1536_COMMON_BOM,X1536_DEV_BOM,X1536_CPU_1P4GHZ,X1536_16GB_HY,X1536_TLC_002TB_HY
639-06757	MLB1,MI-8GB,HY-2TB,X1536	ALT_CMN,ALTERNATE:PART,X1536_COMMON_BOM,X1536_DEV_BOM,X1536_CPU_1P4GHZ,X1536_08GB_MI,X1536_TLC_002TB_HY
639-06758	MLB1,MI-16GB,HY-2TB,X1536	ALT_CMN,ALTERNATE:PART,X1536_COMMON_BOM,X1536_DEV_BOM,X1536_CPU_1P4GHZ,X1536_16GB_MI,X1536_TLC_002TB_HY
639-06759	MLB1,SS-8GB,HY-2TB,X1536	ALT_CMN,ALTERNATE:PART,X1536_COMMON_BOM,X1536_DEV_BOM,X1536_CPU_1P4GHZ,X1536_08GB_SS,X1536_TLC_002TB_HY
639-06760	MLB1,SS-16GB,HY-2TB,X1536	ALT_CMN,ALTERNATE:PART,X1536_COMMON_BOM,X1536_DEV_BOM,X1536_CPU_1P4GHZ,X1536_16GB_SS,X1536_TLC_002TB_HY
639-07179	MLB1,HY-8GB,WD-2TB,X1536	ALT_CMN,ALTERNATE:PART,X1536_COMMON_BOM,X1536_DEV_BOM,X1536_CPU_1P4GHZ,X1536_08GB_HY,X1536_TLC_002TB_WD
639-07180	MLB1,HY-16GB,WD-2TB,X1536	ALT_CMN,ALTERNATE:PART,X1536_COMMON_BOM,X1536_DEV_BOM,X1536_CPU_1P4GHZ,X1536_16GB_HY,X1536_TLC_002TB_WD
639-07181	MLB1,MI-8GB,WD-2TB,X1536	ALT_CMN,ALTERNATE:PART,X1536_COMMON_BOM,X1536_DEV_BOM,X1536_CPU_1P4GHZ,X1536_08GB_MI,X1536_TLC_002TB_WD
639-07182	MLB1,MI-16GB,WD-2TB,X1536	ALT_CMN,ALTERNATE:PART,X1536_COMMON_BOM,X1536_DEV_BOM,X1536_CPU_1P4GHZ,X1536_16GB_MI,X1536_TLC_002TB_WD
639-07183	MLB1,SS-8GB,WD-2TB,X1536	ALT_CMN,ALTERNATE:PART,X1536_COMMON_BOM,X1536_DEV_BOM,X1536_CPU_1P4GHZ,X1536_08GB_SS,X1536_TLC_002TB_WD
639-07184	MLB1,SS-16GB,WD-2TB,X1536	ALT_CMN,ALTERNATE:PART,X1536_COMMON_BOM,X1536_DEV_BOM,X1536_CPU_1P4GHZ,X1536_16GB_SS,X1536_TLC_002TB_WD

BOM NUMBER	BOM NAME	BOM OPTIONS
639-07608	MLB1,HY-8GB,SS-256GB,X1536	ALT_CMN,ALTERNATE:PART,X1536_COMMON_BOM,X1536_DEV_BOM,X1536_CPU_1P4GHZ,X1536_08GB_HY,X1536_TLC_256GB_SS
639-07609	MLB1,HY-16GB,SS-256GB,X1536	ALT_CMN,ALTERNATE:PART,X1536_COMMON_BOM,X1536_DEV_BOM,X1536_CPU_1P4GHZ,X1536_16GB_HY,X1536_TLC_256GB_SS
639-07610	MLB1,MI-8GB,SS-256GB,X1536	ALT_CMN,ALTERNATE:PART,X1536_COMMON_BOM,X1536_DEV_BOM,X1536_CPU_1P4GHZ,X1536_08GB_MI,X1536_TLC_256GB_SS
639-07611	MLB1,MI-16GB,SS-256GB,X1536	ALT_CMN,ALTERNATE:PART,X1536_COMMON_BOM,X1536_DEV_BOM,X1536_CPU_1P4GHZ,X1536_16GB_MI,X1536_TLC_256GB_SS
639-07612	MLB1,SS-8GB,SS-256GB,X1536	ALT_CMN,ALTERNATE:PART,X1536_COMMON_BOM,X1536_DEV_BOM,X1536_CPU_1P4GHZ,X1536_08GB_SS,X1536_TLC_256GB_SS
639-07613	MLB1,SS-16GB,SS-256GB,X1536	ALT_CMN,ALTERNATE:PART,X1536_COMMON_BOM,X1536_DEV_BOM,X1536_CPU_1P4GHZ,X1536_16GB_SS,X1536_TLC_256GB_SS

SYNC_MASTER=J213_JOHN SYNC_DATE=06/05/2018

PAGE TITLE
BOM VARIANT TABLES

Apple Inc.

DRAWING NUMBER 051-04273 SIZE D
REVISION 4.0.0
BRANCH evt-1
PAGE 405 OF 500
SHEET 94 OF 98

NOTICE OF PROPRIETARY PROPERTY:
THE INFORMATION CONTAINED HEREIN IS THE PROPRIETARY PROPERTY OF APPLE INC.
THE POSESSOR AGREES TO THE FOLLOWING:
I TO MAINTAIN THIS DOCUMENT IN CONFIDENCE
II NOT TO REPRODUCE OR COPY IT
III NOT TO REVEAL OR PUBLISH IT IN WHOLE OR PART
IV ALL RIGHTS RESERVED

POR BOMS - MLB2 (2.7 GHZ CPU)

BOM NUMBER	BOM NAME	BOM OPTIONS
639-07113	MLB2,HY-8GB,HY-128GB,X1536	ALT_CMN,ALTERNATE:PART,X1536_COMMON_BOM,X1536_DEV_BOM,X1536_CPU_1P7GHZ,X1536_08GB_HY,X1536_TLC_128GB_HY
639-07114	MLB2,HY-16GB,HY-128GB,X1536	ALT_CMN,ALTERNATE:PART,X1536_COMMON_BOM,X1536_DEV_BOM,X1536_CPU_1P7GHZ,X1536_16GB_HY,X1536_TLC_128GB_HY
639-07115	MLB2,MI-8GB,HY-128GB,X1536	ALT_CMN,ALTERNATE:PART,X1536_COMMON_BOM,X1536_DEV_BOM,X1536_CPU_1P7GHZ,X1536_08GB_MI,X1536_TLC_128GB_HY
639-07116	MLB2,MI-16GB,HY-128GB,X1536	ALT_CMN,ALTERNATE:PART,X1536_COMMON_BOM,X1536_DEV_BOM,X1536_CPU_1P7GHZ,X1536_16GB_MI,X1536_TLC_128GB_HY
639-07117	MLB2,SS-8GB,HY-128GB,X1536	ALT_CMN,ALTERNATE:PART,X1536_COMMON_BOM,X1536_DEV_BOM,X1536_CPU_1P7GHZ,X1536_08GB_SS,X1536_TLC_128GB_HY
639-07118	MLB2,SS-16GB,HY-128GB,X1536	ALT_CMN,ALTERNATE:PART,X1536_COMMON_BOM,X1536_DEV_BOM,X1536_CPU_1P7GHZ,X1536_16GB_SS,X1536_TLC_128GB_HY
639-07185	MLB2,HY-8GB,TS-128GB,X1536	ALT_CMN,ALTERNATE:PART,X1536_COMMON_BOM,X1536_DEV_BOM,X1536_CPU_1P7GHZ,X1536_08GB_HY,X1536_TLC_128GB_TS
639-07186	MLB2,HY-16GB,TS-128GB,X1536	ALT_CMN,ALTERNATE:PART,X1536_COMMON_BOM,X1536_DEV_BOM,X1536_CPU_1P7GHZ,X1536_16GB_HY,X1536_TLC_128GB_TS
639-07187	MLB2,MI-8GB,TS-128GB,X1536	ALT_CMN,ALTERNATE:PART,X1536_COMMON_BOM,X1536_DEV_BOM,X1536_CPU_1P7GHZ,X1536_08GB_MI,X1536_TLC_128GB_TS
639-07188	MLB2,MI-16GB,TS-128GB,X1536	ALT_CMN,ALTERNATE:PART,X1536_COMMON_BOM,X1536_DEV_BOM,X1536_CPU_1P7GHZ,X1536_16GB_MI,X1536_TLC_128GB_TS
639-07189	MLB2,SS-8GB,TS-128GB,X1536	ALT_CMN,ALTERNATE:PART,X1536_COMMON_BOM,X1536_DEV_BOM,X1536_CPU_1P7GHZ,X1536_08GB_SS,X1536_TLC_128GB_TS
639-07190	MLB2,SS-16GB,TS-128GB,X1536	ALT_CMN,ALTERNATE:PART,X1536_COMMON_BOM,X1536_DEV_BOM,X1536_CPU_1P7GHZ,X1536_16GB_SS,X1536_TLC_128GB_TS
639-07125	MLB2,HY-8GB,HY-256GB,X1536	ALT_CMN,ALTERNATE:PART,X1536_COMMON_BOM,X1536_DEV_BOM,X1536_CPU_1P7GHZ,X1536_08GB_HY,X1536_TLC_256GB_HY
639-07126	MLB2,HY-16GB,HY-256GB,X1536	ALT_CMN,ALTERNATE:PART,X1536_COMMON_BOM,X1536_DEV_BOM,X1536_CPU_1P7GHZ,X1536_16GB_HY,X1536_TLC_256GB_HY
639-07127	MLB2,MI-8GB,HY-256GB,X1536	ALT_CMN,ALTERNATE:PART,X1536_COMMON_BOM,X1536_DEV_BOM,X1536_CPU_1P7GHZ,X1536_08GB_MI,X1536_TLC_256GB_HY
639-07128	MLB2,MI-16GB,HY-256GB,X1536	ALT_CMN,ALTERNATE:PART,X1536_COMMON_BOM,X1536_DEV_BOM,X1536_CPU_1P7GHZ,X1536_16GB_MI,X1536_TLC_256GB_HY
639-07129	MLB2,SS-8GB,HY-256GB,X1536	ALT_CMN,ALTERNATE:PART,X1536_COMMON_BOM,X1536_DEV_BOM,X1536_CPU_1P7GHZ,X1536_08GB_SS,X1536_TLC_256GB_HY
639-07130	MLB2,SS-16GB,HY-256GB,X1536	ALT_CMN,ALTERNATE:PART,X1536_COMMON_BOM,X1536_DEV_BOM,X1536_CPU_1P7GHZ,X1536_16GB_SS,X1536_TLC_256GB_HY
639-07191	MLB2,HY-8GB,TS-256GB,X1536	ALT_CMN,ALTERNATE:PART,X1536_COMMON_BOM,X1536_DEV_BOM,X1536_CPU_1P7GHZ,X1536_08GB_HY,X1536_TLC_256GB_TS
639-07192	MLB2,HY-16GB,TS-256GB,X1536	ALT_CMN,ALTERNATE:PART,X1536_COMMON_BOM,X1536_DEV_BOM,X1536_CPU_1P7GHZ,X1536_16GB_HY,X1536_TLC_256GB_TS
639-07193	MLB2,MI-8GB,TS-256GB,X1536	ALT_CMN,ALTERNATE:PART,X1536_COMMON_BOM,X1536_DEV_BOM,X1536_CPU_1P7GHZ,X1536_08GB_MI,X1536_TLC_256GB_TS
639-07194	MLB2,MI-16GB,TS-256GB,X1536	ALT_CMN,ALTERNATE:PART,X1536_COMMON_BOM,X1536_DEV_BOM,X1536_CPU_1P7GHZ,X1536_16GB_MI,X1536_TLC_256GB_TS
639-07195	MLB2,SS-8GB,TS-256GB,X1536	ALT_CMN,ALTERNATE:PART,X1536_COMMON_BOM,X1536_DEV_BOM,X1536_CPU_1P7GHZ,X1536_08GB_SS,X1536_TLC_256GB_TS
639-07196	MLB2,SS-16GB,TS-256GB,X1536	ALT_CMN,ALTERNATE:PART,X1536_COMMON_BOM,X1536_DEV_BOM,X1536_CPU_1P7GHZ,X1536_16GB_SS,X1536_TLC_256GB_TS
639-07137	MLB2,HY-8GB,HY-512GB,X1536	ALT_CMN,ALTERNATE:PART,X1536_COMMON_BOM,X1536_DEV_BOM,X1536_CPU_1P7GHZ,X1536_08GB_HY,X1536_TLC_512GB_HY
639-07138	MLB2,HY-16GB,HY-512GB,X1536	ALT_CMN,ALTERNATE:PART,X1536_COMMON_BOM,X1536_DEV_BOM,X1536_CPU_1P7GHZ,X1536_16GB_HY,X1536_TLC_512GB_HY
639-07139	MLB2,MI-8GB,HY-512GB,X1536	ALT_CMN,ALTERNATE:PART,X1536_COMMON_BOM,X1536_DEV_BOM,X1536_CPU_1P7GHZ,X1536_08GB_MI,X1536_TLC_512GB_HY
639-07140	MLB2,MI-16GB,HY-512GB,X1536	ALT_CMN,ALTERNATE:PART,X1536_COMMON_BOM,X1536_DEV_BOM,X1536_CPU_1P7GHZ,X1536_16GB_MI,X1536_TLC_512GB_HY
639-07141	MLB2,SS-8GB,HY-512GB,X1536	ALT_CMN,ALTERNATE:PART,X1536_COMMON_BOM,X1536_DEV_BOM,X1536_CPU_1P7GHZ,X1536_08GB_SS,X1536_TLC_512GB_HY
639-07142	MLB2,SS-16GB,HY-512GB,X1536	ALT_CMN,ALTERNATE:PART,X1536_COMMON_BOM,X1536_DEV_BOM,X1536_CPU_1P7GHZ,X1536_16GB_SS,X1536_TLC_512GB_HY
639-07197	MLB2,HY-8GB,TS-512GB,X1536	ALT_CMN,ALTERNATE:PART,X1536_COMMON_BOM,X1536_DEV_BOM,X1536_CPU_1P7GHZ,X1536_08GB_HY,X1536_TLC_512GB_TS
639-07198	MLB2,HY-16GB,TS-512GB,X1536	ALT_CMN,ALTERNATE:PART,X1536_COMMON_BOM,X1536_DEV_BOM,X1536_CPU_1P7GHZ,X1536_16GB_HY,X1536_TLC_512GB_TS
639-07199	MLB2,MI-8GB,TS-512GB,X1536	ALT_CMN,ALTERNATE:PART,X1536_COMMON_BOM,X1536_DEV_BOM,X1536_CPU_1P7GHZ,X1536_08GB_MI,X1536_TLC_512GB_TS
639-07200	MLB2,MI-16GB,TS-512GB,X1536	ALT_CMN,ALTERNATE:PART,X1536_COMMON_BOM,X1536_DEV_BOM,X1536_CPU_1P7GHZ,X1536_16GB_MI,X1536_TLC_512GB_TS
639-07201	MLB2,SS-8GB,TS-512GB,X1536	ALT_CMN,ALTERNATE:PART,X1536_COMMON_BOM,X1536_DEV_BOM,X1536_CPU_1P7GHZ,X1536_08GB_SS,X1536_TLC_512GB_TS
639-07202	MLB2,SS-16GB,TS-512GB,X1536	ALT_CMN,ALTERNATE:PART,X1536_COMMON_BOM,X1536_DEV_BOM,X1536_CPU_1P7GHZ,X1536_16GB_SS,X1536_TLC_512GB_TS
639-07143	MLB2,HY-8GB,HY-1TB,X1536	ALT_CMN,ALTERNATE:PART,X1536_COMMON_BOM,X1536_DEV_BOM,X1536_CPU_1P7GHZ,X1536_08GB_HY,X1536_TLC_001TB_HY
639-07144	MLB2,HY-16GB,HY-1TB,X1536	ALT_CMN,ALTERNATE:PART,X1536_COMMON_BOM,X1536_DEV_BOM,X1536_CPU_1P7GHZ,X1536_16GB_HY,X1536_TLC_001TB_HY
639-07145	MLB2,MI-8GB,HY-1TB,X1536	ALT_CMN,ALTERNATE:PART,X1536_COMMON_BOM,X1536_DEV_BOM,X1536_CPU_1P7GHZ,X1536_08GB_MI,X1536_TLC_001TB_HY
639-07146	MLB2,MI-16GB,HY-1TB,X1536	ALT_CMN,ALTERNATE:PART,X1536_COMMON_BOM,X1536_DEV_BOM,X1536_CPU_1P7GHZ,X1536_16GB_MI,X1536_TLC_001TB_HY
639-07147	MLB2,SS-8GB,HY-1TB,X1536	ALT_CMN,ALTERNATE:PART,X1536_COMMON_BOM,X1536_DEV_BOM,X1536_CPU_1P7GHZ,X1536_08GB_SS,X1536_TLC_001TB_HY
639-07148	MLB2,SS-16GB,HY-1TB,X1536	ALT_CMN,ALTERNATE:PART,X1536_COMMON_BOM,X1536_DEV_BOM,X1536_CPU_1P7GHZ,X1536_16GB_SS,X1536_TLC_001TB_HY
639-07203	MLB2,HY-8GB,TS-1TB,X1536	ALT_CMN,ALTERNATE:PART,X1536_COMMON_BOM,X1536_DEV_BOM,X1536_CPU_1P7GHZ,X1536_08GB_HY,X1536_TLC_001TB_TS
639-07204	MLB2,HY-16GB,TS-1TB,X1536	ALT_CMN,ALTERNATE:PART,X1536_COMMON_BOM,X1536_DEV_BOM,X1536_CPU_1P7GHZ,X1536_16GB_HY,X1536_TLC_001TB_TS
639-07205	MLB2,MI-8GB,TS-1TB,X1536	ALT_CMN,ALTERNATE:PART,X1536_COMMON_BOM,X1536_DEV_BOM,X1536_CPU_1P7GHZ,X1536_08GB_MI,X1536_TLC_001TB_TS
639-07206	MLB2,MI-16GB,TS-1TB,X1536	ALT_CMN,ALTERNATE:PART,X1536_COMMON_BOM,X1536_DEV_BOM,X1536_CPU_1P7GHZ,X1536_16GB_MI,X1536_TLC_001TB_TS
639-07207	MLB2,SS-8GB,TS-1TB,X1536	ALT_CMN,ALTERNATE:PART,X1536_COMMON_BOM,X1536_DEV_BOM,X1536_CPU_1P7GHZ,X1536_08GB_SS,X1536_TLC_001TB_TS
639-07208	MLB2,SS-16GB,TS-1TB,X1536	ALT_CMN,ALTERNATE:PART,X1536_COMMON_BOM,X1536_DEV_BOM,X1536_CPU_1P7GHZ,X1536_16GB_SS,X1536_TLC_001TB_TS
639-07149	MLB2,HY-8GB,HY-2TB,X1536	ALT_CMN,ALTERNATE:PART,X1536_COMMON_BOM,X1536_DEV_BOM,X1536_CPU_1P7GHZ,X1536_08GB_HY,X1536_TLC_002TB_HY
639-07150	MLB2,HY-16GB,HY-2TB,X1536	ALT_CMN,ALTERNATE:PART,X1536_COMMON_BOM,X1536_DEV_BOM,X1536_CPU_1P7GHZ,X1536_16GB_HY,X1536_TLC_002TB_HY
639-07151	MLB2,MI-8GB,HY-2TB,X1536	ALT_CMN,ALTERNATE:PART,X1536_COMMON_BOM,X1536_DEV_BOM,X1536_CPU_1P7GHZ,X1536_08GB_MI,X1536_TLC_002TB_HY
639-07152	MLB2,MI-16GB,HY-2TB,X1536	ALT_CMN,ALTERNATE:PART,X1536_COMMON_BOM,X1536_DEV_BOM,X1536_CPU_1P7GHZ,X1536_16GB_MI,X1536_TLC_002TB_HY
639-07153	MLB2,SS-8GB,HY-2TB,X1536	ALT_CMN,ALTERNATE:PART,X1536_COMMON_BOM,X1536_DEV_BOM,X1536_CPU_1P7GHZ,X1536_08GB_SS,X1536_TLC_002TB_HY
639-07154	MLB2,SS-16GB,HY-2TB,X1536	ALT_CMN,ALTERNATE:PART,X1536_COMMON_BOM,X1536_DEV_BOM,X1536_CPU_1P7GHZ,X1536_16GB_SS,X1536_TLC_002TB_HY
639-07209	MLB2,HY-8GB,WD-2TB,X1536	ALT_CMN,ALTERNATE:PART,X1536_COMMON_BOM,X1536_DEV_BOM,X1536_CPU_1P7GHZ,X1536_08GB_HY,X1536_TLC_002TB_WD
639-07210	MLB2,HY-16GB,WD-2TB,X1536	ALT_CMN,ALTERNATE:PART,X1536_COMMON_BOM,X1536_DEV_BOM,X1536_CPU_1P7GHZ,X1536_16GB_HY,X1536_TLC_002TB_WD
639-07211	MLB2,MI-8GB,WD-2TB,X1536	ALT_CMN,ALTERNATE:PART,X1536_COMMON_BOM,X1536_DEV_BOM,X1536_CPU_1P7GHZ,X1536_08GB_MI,X1536_TLC_002TB_WD
639-07212	MLB2,MI-16GB,WD-2TB,X1536	ALT_CMN,ALTERNATE:PART,X1536_COMMON_BOM,X1536_DEV_BOM,X1536_CPU_1P7GHZ,X1536_16GB_MI,X1536_TLC_002TB_WD
639-07213	MLB2,SS-8GB,WD-2TB,X1536	ALT_CMN,ALTERNATE:PART,X1536_COMMON_BOM,X1536_DEV_BOM,X1536_CPU_1P7GHZ,X1536_08GB_SS,X1536_TLC_002TB_WD
639-07214	MLB2,SS-16GB,WD-2TB,X1536	ALT_CMN,ALTERNATE:PART,X1536_COMMON_BOM,X1536_DEV_BOM,X1536_CPU_1P7GHZ,X1536_16GB_SS,X1536_TLC_002TB_WD

BOM NUMBER	BOM NAME	BOM OPTIONS
639-07614	MLB2,HY-8GB,SS-256GB,X1536	ALT_CMN,ALTERNATE:PART,X1536_COMMON_BOM,X1536_DEV_BOM,X1536_CPU_1P7GHZ,X1536_08GB_HY,X1536_TLC_256GB_SS
639-07615	MLB2,HY-16GB,SS-256GB,X1536	ALT_CMN,ALTERNATE:PART,X1536_COMMON_BOM,X1536_DEV_BOM,X1536_CPU_1P7GHZ,X1536_16GB_HY,X1536_TLC_256GB_SS
639-07616	MLB2,MI-8GB,SS-256GB,X1536	ALT_CMN,ALTERNATE:PART,X1536_COMMON_BOM,X1536_DEV_BOM,X1536_CPU_1P7GHZ,X1536_08GB_MI,X1536_TLC_256GB_SS
639-07617	MLB2,MI-16GB,SS-256GB,X1536	ALT_CMN,ALTERNATE:PART,X1536_COMMON_BOM,X1536_DEV_BOM,X1536_CPU_1P7GHZ,X1536_16GB_MI,X1536_TLC_256GB_SS
639-07618	MLB2,SS-8GB,SS-256GB,X1536	ALT_CMN,ALTERNATE:PART,X1536_COMMON_BOM,X1536_DEV_BOM,X1536_CPU_1P7GHZ,X1536_08GB_SS,X1536_TLC_256GB_SS
639-07619	MLB2,SS-16GB,SS-256GB,X1536	ALT_CMN,ALTERNATE:PART,X1536_COMMON_BOM,X1536_DEV_BOM,X1536_CPU_1P7GHZ,X1536_16GB_SS,X1536_TLC_256GB_SS

SYNC_MASTER=J213_JOHN SYNC_DATE=06/05/2018

PAGE TITLE
BOM VARIANT TABLES

Apple Inc.

DRAWING NUMBER 051-04273 SIZE D
REVISION 4.0.0
BRANCH evt-1
PAGE 406 OF 500
SHEET 95 OF 98

NOTICE OF PROPRIETARY PROPERTY:
THE INFORMATION CONTAINED HEREIN IS THE PROPRIETARY PROPERTY OF APPLE INC.
THE POSESSOR AGREES TO THE FOLLOWING:
I TO MAINTAIN THIS DOCUMENT IN CONFIDENCE
II NOT TO REPRODUCE OR COPY IT
III NOT TO REVEAL OR PUBLISH IT IN WHOLE OR PART
IV ALL RIGHTS RESERVED

DEV BOMS - NO CPU, NO DRAM, NO SSD

BOM NUMBER	BOM NAME	BOM OPTIONS
939-07159	DEV,MLB,NO-CPU-MEM-NAND,2-LAND,X1536	ALT_CMN,ALTERNATE:PART,X1536_COMMON_BOM,X1536_DEV_BOM,X1536_CPU_NO_CPU,X1536_NO_DRAM,X1536_NO_NAND_2_LD
939-07160	DEV,MLB,NO-CPU-MEM-NAND,4-LAND,X1536	ALT_CMN,ALTERNATE:PART,X1536_COMMON_BOM,X1536_DEV_BOM,X1536_CPU_NO_CPU,X1536_NO_DRAM,X1536_NO_NAND_4_LD

vinafix.com

SYNC_MASTER=J213_JOHN SYNC_DATE=06/05/2018

PAGE TITLE
BOM VARIANT TABLES

Apple Inc.

DRAWING NUMBER 051-04273 SIZE D
REVISION 4.0.0
BRANCH evt-1
PAGE 407 OF 500
SHEET 96 OF 98

NOTICE OF PROPRIETARY PROPERTY:
THE INFORMATION CONTAINED HEREIN IS THE PROPRIETARY PROPERTY OF APPLE INC.
THE POSESSOR AGREES TO THE FOLLOWING:
I TO MAINTAIN THIS DOCUMENT IN CONFIDENCE
II NOT TO REPRODUCE OR COPY IT
III NOT TO REVEAL OR PUBLISH IT IN WHOLE OR PART
IV ALL RIGHTS RESERVED

DC-DC

PART NUMBER	ALTERNATE FOR PART NUMBER	BOM OPTION	REF DES	COMMENTS:	
152S00403	152S00322	ALT_CMN	ALL	<RDAR://39801983>	MURATA PRIMARY, CHILISIN ALT IND,PWR,0.68UH,20%,6.3A,26MOHM,3225
128S00042	128S0311	ALT_CMN	ALL	<RDAR://40172980>	NEC PRIMARY, KEMET ALTERNATE CAP,TANT,POLY,220UF,6.3V,25MOHM,B2
128S00043311		ALT_CMNALL		<RDAR://40172980>	NEC PRIMARY, PANASONIC ALTERNATE CAP,TANT,POLY,220UF,6.3V,25MOHM,B2
128S0264S0364		ALT_CMN	ALL	<RDAR://44394151>	KEMET PRIMARY, PANASONIC ALTERNATE CAP,AL,POLY,68UF,20%,16V,40MOHM,D2
152S00726	152S00592	ALT_CMN	ALL	<RDAR://40221857>	CYNTEC PRIMARY, CHILISIN ALTERNATE IND,MLD,1UH,2.6A,95MOHM,2012
152S00724	152S00311	ALT_CMN	ALL	<RDAR://40221450>	CYNTEC PRIMARY, CHILISIN ALTERNATE IND,MLD,1UH,20%,3.8A,55MOHM,2016X1.2MM
152S00398	152S00204	ALT_CMN	ALL	<RDAR://40221612>	CYNTEC PRIMARY, TAIYO ALTERNATE IND,PWR,SHLD,0.22UH,6.7A,0.023 OHM,2012
152S00725	152S00590	ALT_CMN	ALL	<RDAR://40223132>	CYNTEC PRIMARY, CHILISIN ALTERNATE IND,MLD,0.47UH,4.8A,34MOHM,2016
152S00363	152S00048	ALT_CMN	ALL	<RDAR://40040471>	CYNTEC PRIMARY, NEC ALTERNATE IND,MLD,0.22UH,1.9MO,44,8.6X8.0X2.4MM
376S00207203		ALT_CMNALL		<RDAR://40169831>	VISHAY PRIMARY, FAIRCHILD ALTERNATE MOSFET,DL-N,30V,15.6A,13.8MOHM@4.5V,DFN8
376S00276S00203		ALT_CMN	ALL	<RDAR://40169831>	VISHAY PRIMARY, DIODES ALTERNATE MOSFET,DL-N,30V,15.6A,13.8MOHM@4.5V,DFN8
376S00226	376S00203	ALT_CMN	ALL	<RDAR://40169831>	VISHAY PRIMARY, VISHAY ALTERNATE MOSFET,DL-N,30V,15.6A,13.8MOHM@4.5V,DFN8
152S00786	152S00344	ALT_CMN	ALL	<RDAR://40169331>	MURATA PRIMARY, CYNTEC ALTERNATE IND,MLD,1UH,20%,4.7A,40MOHM,2520
376S00302	376S1038	ALT_CMN	ALL	<RDAR://40169426>	TI PRIMARY, DIODES ALTERNATE MOFET DUAL-N,30V,20A,9.45/3.6MOHN,3X3DFN
376S00007	376S1179	ALT_CMN	ALL	<RDAR://40170031>	VISHAY PRIMARY, AOS ALTERNATE MOSFET,P-CH,20V,40A,0.0039 OHM,8P,PWRPAK
376S00251179		ALT_CMNALL		<RDAR://40170031>	VISHAY PRIMARY, FAIRCHILD ALTERNATE MOSFET,P-CH,20V,40A,0.0039 OHM,8P,PWRPAK
107S00005011		ALT_CMNALL		<RDAR://40039575>	CYNTEC PRIMARY, TFT ALTERNATE RES,MTL FLM,0.00075OHM,1%,4-L,0612,BLK
128S0445	128S0436	ALT_CMN	ALL	<RDAR://40172491>	KEMET PRIMARY, PANASONIC ALTERNATE CAP,TANT,POLY,33UF,20%,16V,40MOHM,D12
128S0392	128S0436	ALT_CMN	ALL	<RDAR://40172491>	KEMET PRIMARY, PANASONIC ALTERNATE CAP,TANT,POLY,33UF,20%,16V,40MOHM,D12
353S00831	353S00519	ALT_CMN	ALL	<RDAR://43065874>	VISHAY PRIMARY, FAIRCHILD ALTERNATE IC,SIC621,DR MOS,IMVP-8,60A,PQFN31,5X5MM
353S01831	353S00519	ALT_CMN	ALL	<RDAR://43065874>	VISHAY PRIMARY, AOS ALTERNATE IC,SIC621,DR MOS,IMVP-8,60A,PQFN31,5X5MM
128S00039	128S00038	ALT_CMN	ALL	<RDAR://40173276>	KEMET PRIMARY, NEC ALT CAP,TA,POLY,150UF,20%,6.3V,18MO,2A,B2
128S00200038		ALT_CMNALL		<RDAR://40173276>	KEMET PRIMARY, PANASONIC ALT CAP,TA,POLY,150UF,20%,6.3V,18MO,2A,B2
353S00832S00525		ALT_CMN	ALL	<RDAR://43067934>	VISHAY PRIMARY, FAIRCHILD ALT IC,SIC532,DR MOS,IMVP-8,30A,PQFN22,45X35
152S01024	152S00386	ALT_CMN	ALL	<RDAR://42185308>	MURATA PRIMARY, CHILISIN ALT IND,MLD,1.0UH,20%,32MOHM,4.8A,3225
152S00707	152S00689	ALT_CMN	ALL	<RDAR://43666396>	CYNTEC PRIMARY, CHILISIN ALT IND,MLD,0.47UH,4.7MO,17.5A,5.6X5.2X2.4MM
376S00303	376S00012	ALT_CMN	ALL	<RDAR://43066124>	TI PRIMARY, DIODES ALT MOSFET DUAL-N,30V,15A,18/5.5MOHM,3X3DFN
376S00282	376S1128	ALT_CMN	ALL	<RDAR://43067686>	DIODES PRIMARY, ON SEMI ALT XSTR,FET,N-CH,30V,300MA,3P DFN
376S00224	376S1128	ALT_CMN	ALL	<RDAR://44187449>	DIODES PRIMARY, NEXPERIA ALT XSTR,FET,N-CH,30V,300MA,3P DFN
128S0570351		ALT_CMNALL		<RDAR://43396612>	SANYO PRIMARY, KEMET ALT CAP,TANT,POLY,330UF,2V,13MOHM,B2
128S00125S0351		ALT_CMN	ALL	<RDAR://43396612>	SANYO PRIMARY, NEC ALT CAP,TANT,POLY,330UF,2V,13MOHM,B2
152S00841	152S00238	ALT_CMN	ALL	<RDAR://44152899>	CYNTEC PRIMARY, CHILISIN ALT IND,MLD,0.56UH,7.2MO,16A,5.4X5.2X2.4MM
152S00765	152S00239	ALT_CMN	ALL	<RDAR://44155454>	CYNTEC PRIMARY, CHILISIN ALT IND,MLD,0.68UH,9.0MO,14.5A,5.4X5.2X2.4MM
138S00047	138S00073	ALT_CMN	ALL	<RDAR://44159571>	MURATA PRIMARY, TAIYO ALT CAP,X6S,10UF,20%,6.3V,HZTL,MUR,0402
131S00308	131S00037	ALT_CMN	ALL	<RDAR://44160572>	MURATA PRIMARY, YAGEO ALT CAP,CER,C0G,3300PF,5%,50V,0603
107S00750029		ALT_CMNALL		<RDAR://44206108>	TFT PRIMARY, YAGEO ALT RES,MTL FLM,0.005OHM,1%,4-L,0612,BLK
128S0026011		ALT_CMNALL		<RDAR://44202728>	KEMET PRIMARY, NEC ALT CAP,TANT,POLY,6.8UF,20%,35V,90MOHM,B1.2
128S00087	128S00011	ALT_CMN	ALL	<RDAR://44202728>	KEMET PRIMARY, PANASONIC ALT CAP,TANT,POLY,6.8UF,20%,35V,90MOHM,B1.2
128S00031	128S00011	ALT_CMN	ALL	<RDAR://44202728>	KEMET PRIMARY, ROHM ALT CAP,TANT,POLY,6.8UF,20%,35V,90MOHM,B1.2
107S00076	107S00044	ALT_CMN	ALL	<RDAR://44205141>	CYNTEC PRIMARY, YAGEO ALT RES,MF,0.010 OHM,0.5%,0612-4T,BLK
152S00368	152S00269	ALT_CMN	ALL	<RDAR://44243170>	CYNTEC PRIMARY, TOKIN ALT IND,MLD,1.0UH,20%,14A,10.7MO,6.6X6.6X2.4
152S00800	152S00268	ALT_CMN	ALL	<RDAR://44244361>	CYNTEC PRIMARY, NEC-TOKIN ALT IND,MLD,1.5UH,20%,12.5A,17.0MO,7.0X6.6MM
138S00084060		ALT_CMNALL		<RDAR://44320030>	138S00060 PRIMARY, 138S00084 ALT CAP,CER,47UF,20%,6.3V,X5R,0603
138S0788S0941		ALT_CMN	ALL	<RDAR://44323944>	MURATA PRIMARY, SAMSUNG ALT CAP,CER,2.2UF,20%,25V,X5R,HRZTL,0402,MUR
138S00104	138S0978	ALT_CMN	ALL	<RDAR://44325053>	MURATA PRIMARY, TAIYO ALT CAP,CER,2.2UF,20%,25V,X5R,0402,H=0.55MM
152S00383	152S00198	ALT_CMN	ALL	<RDAR://44325096>	CYNTEC PRIMARY, VISHAY ALT IND,MLD,2.7UH,19.6MO,12.5A,10.9X10X2.4MM
152S00680	152S00198	ALT_CMN	ALL	<RDAR://44325096>	CYNTEC PRIMARY, CHILISIN ALT IND,MLD,2.7UH,19.6MO,12.5A,10.9X10X2.4MM
138S0863	138S0853	ALT_CMN	ALL	<RDAR://44326703>	MURATA PRIMARY, TAIYO YUDEN ALT CAP,CER,15UF,20%,2V,X6S,0402,MURATA
138S00229	138S00107	ALT_CMN	ALL	<RDAR://44362824>	MURATA PRIMARY, KYOCERA ALT CAP,X5R,20UF,20%,10V,0402,H=0.8MM
138S0736705		ALT_CMNALL		<RDAR://44321492>	MURATA PRIMARY, SAMSUNG ALT CAP,CER,X5R,10UF,20%,10V,0402
138S0748S0705		ALT_CMN	ALL	<RDAR://44321492>	MURATA PRIMARY, TAIYO YUDEN ALT CAP,CER,X5R,10UF,20%,10V,0402
107S0249	107S0251	ALT_CMN	ALL	<RDAR://44364242>	CYNTEC PRIMARY,TFT ALT RES,SENSE,0.002OHM,1W,4-TERM,1%,0612,CYN
132S00012	132S0401	ALT_CMN	ALL	<RDAR://44325754>	TAIYO YUDEN PRIMARY,MURATA ALT CAP,CER,0.22UF,10%,25V,X7R,0402
138S00077	138S00035	ALT_CMN	ALL	<RDAR://44363047>	MURATA PRIMARY,TAIYO ALT CAP,CER,20UF,20%,2.5V,X6S,HRZTL,0402
138S00093	138S00035	ALT_CMN	ALL	<RDAR://44363047>	MURATA PRIMARY,KYOCERA ALT CAP,CER,20UF,20%,2.5V,X6S,HRZTL,0402
132S00280409		ALT_CMNALL		<RDAR://44325817>	TAIYO PRIMARY,MURATA ALT CAP,CER,X6S,0.1UF,20%,16V,0201
371S00200181		ALT_CMNALL		<RDAR://44622207>	DIODES PRIMARY,ON SEMI ALT DIODE,ZENER,5.6V,250MW,DFN0201
152S01023	152S00384	ALT_CMN	ALL	<RDAR://44622443>	MURATA PRIMARY, CHILISIN ALT IND,MLD,0.48UH,20%,23MOHM,6.7A,3225
138S00015	138S0777	ALT_CMN	ALL	<RDAR://44658436>	MURATA PRIMARY, TAIYO YUDEN AND SAMSUNG ALT CAP,CER,10UF,20%,16V,X6S,0603
103S0321	103S0276	ALT_CMN	ALL	<RDAR://44660673>	CYNTEC PRIMARY, YAGEO ALT RES,MF,4.42K OHM,1/20W,0.1%,0201,SMD
107S00139	107S0178	ALT_CMN	ALL	<RDAR://44693560>	MURATA PRIMARY, PANASONIC ALT THERMISTOR,NTC,220K OHM,4485K,3%,0201

SYSTEM EE

	PART NUMBER	ALTERNATE FOR PART NUMBER	BOM OPTION	REF DES	COMMENTS:	
	376S1080	376S0820	ALT_CMN	ALL	<RDAR://42561814>	ON SEMI PRIMARY, DIODES ALT XSTR,FET,DUAL COMP,20V,220/200MA,SOT963
	353S01505	353S01389	ALT_CMN	ALL	<RDAR://42641759>	TI PRIMARY, ON SEMI ALT IC INA210A,CURRENT SENSE,200V/V,QFN10
353S01041		353S01042	ALT_CMNALL		<RDAR://42672116>	TI PRIMARY, ST MICRO ALT IC,REF3312,V-REF,1.25V,0.15%,5MA,QFN8
	376S00146	376S1061	ALT_CMNALL		<RDAR://42560905>	DIODES PRIMARY, ROHM ALT XSTR,FET,P-CH,30V,400MA,ENH MODE,SOT883
	371S00190	371S00085	ALT_CMN	ALL	<RDAR://42639806>	ON SEMI PRIMARY, DIODES ALT DIODE SCHOTTKY,40V,2A,LOW VF,0603
	353S00750	353S00877	ALT_CMN	ALL	<RDAR://42677730>	ON SEMI PRIMARY, TI ALT IC,NCP160,LDO REG,1.8V,0.25A,XDFN5
	353S01506	353S01404	ALT_CMN	ALL	<RDAR://42641429>	TI PRIMARY, ON SEMI ALT IC,INA214A,CURRENT SENSE,100V/V,QFN10
	335S00213	335S0888	ALT_CMN	ALL	<RDAR://43152541>	ST PRIMARY, ON SEMI ALT IC,SERIAL I2C EEPROM,128KBIT,8P,MLP8
	353S00636	353S4037	ALT_CMN	ALL	<RDAR://42639994>	DIODES PRIMARY, NXP ALT IC,PI3USB102E,DIFF.USB SW,SPDT,TQFN-10
353S00879		353S00754	ALT_CMNALL		<RDAR://43151381>	TI PRIMARY, ON SEMI ALT IC,LP5907,LDO REG,1.825V,250MA,X2SON5
	353S00878	353S00599	ALT_CMNALL		<RDAR://43151782>	ON SEMI PRIMARY, TI ALT IC,NCP160,LDO REG,3.0V,0.25A,DFN4
	311S00138	311S0436	ALT_CMN	ALL	<RDAR://43152801>	TI PRIMARY, NXP ALT IC,74AVC4T245,4BIT VOLT TRANSLATOR,QFP16
	311S00060	311S0273	ALT_CMN	ALL	<RDAR://43153429>	PHILLIPS PRIMARY, DIODES ALT IC,74LVC1G32,SNGL 2-INPT OR GATE,SOT891
	353S4376	353S3384	ALT_CMN	ALL	<RDAR://43953240>	TI PRIMARY, ON SEMI ALT IC,LMV331,COMP,OPEN COL,2.7V,60UA,SC70
	311S0426	311S00007	ALT_CMN	ALL	<RDAR://43955202>	DIODES PRIMARY, NXP ALT IC,74LVC1G07,SNGL BFR W/OD OUT,DFN,6P
311S00192		311S00191	ALT_CMNALL		<RDAR://43955903>	DIODES PRIMARY, NEXPERIA ALT IC,74LVC1G07,SNGL BFR W/OD OUT,DFN,6P
107S0211		107S0210	ALT_CMNALL		<RDAR://44198222>	ROHM PRIMARY, VISHAY ALT RES,MTL,.005 OHM,1%,1W,1206
	335S00270	335S00203	ALT_CMN	ALL	<RDAR://43152675>	MACRONIX PRIMARY, ADESTO ALT IC,FLASH,SERIAL,SPI,4MX8,1.8V,4X3MM,DFN8
	138S00086	138S0884	ALT_CMN	ALL	<RDAR://44320169>	MURATA PRIMARY, TAIYO ALT CAP,CER,X5R,20UF,20%,6.3V,0402,H=0.7MM
	138S0714	138S0713	ALT_CMN	ALL	<RDAR://44325434>	MURATA PRIMARY, SAMSUNG ALT CAP,CER,10UF,6.3V,X5R,0.7MM,0402,SAMSUNG
	138S0715	138S0732	ALT_CMN	ALL	<RDAR://44325464>	MURATA PRIMARY, SAMSUNG ALT CAP,CER,X5R,1UF,10%,10V,0402,MURATA
	138S00111	138S00036	ALT_CMN	ALL	<RDAR://44325659>	MURATA PRIMARY, TAIYO YUDEN ALT CAP,CER,20UF,20%,2.5V,X6S,LOW NOISE,0402
132S00176		132S0640	ALT_CMNALL		<RDAR://44325857>	MURATA PRIMARY, YAGEO ALT CAP,CER,0.047UH,10%,50V,X7R,0402
	311S0596	311S0593	ALT_CMNALL		<RDAR://44345963>	NXP PRIMARY, TI ALT IC,VOLT-LEVEL TRANS,W/CONFIG GATE,SOT886
	311S00156	311S00129	ALT_CMN	ALL	<RDAR://44347874>	TI PRIMARY, NEXPERIA ALT IC,XCVR,BUS,4-BIT,DL SPPLY,3-OUT,UQFN16
	311S00013	311S0508	ALT_CMN	ALL	<RDAR://44348000>	NEXPERIA PRIMARY, DIODES ALT IC,74AUP1G07,SNGL BUFFER W/OD OUT,SOT891
	152S00434	152S1829	ALT_CMN	ALL	<RDAR://44363291>	TDK PRIMARY, CYNTEC ALT IND,PWR,MULT,1UH,20%,0.4A,0.636 OHM,0402
	155S00166	155S0391	ALT_CMN	ALL	<RDAR://44364823>	MURATA PRIMARY, TDK ALT FERR BD,220 OHM,25%,700MA,0.28 DCR,0402
	155S0660	155S0513	ALT_CMN	ALL	<RDAR://44364960>	TDK PRIMARY, MURATA ALT FERR BD,22 OHM,25%,1A,55 MOHM DCR,0201
155S00018		155S0664	ALT_CMNALL		<RDAR://44365105>	MURATA PRIMARY, TAIYO ALT FERR BD,80 OHM,25%,500MA,0.18 DCR,0201
	155S00007	155S0667	ALT_CMNALL		<RDAR://44365462>	PANASONIC PRIMARY, TAIYO ALT FLTR,COMMON MODE,90 OHM,100MA,0202
	311S0562	311S0372	ALT_CMN	ALL	<RDAR://43153066>	NXP PRIMARY, TI ALT IC,VOLT-LEVEL TRANS,W/CONFIG GATE,SOT891
	138S00117	138S00071	ALT_CMN	ALL	<RDAR://44325102>	MURATA PRIMARY, KYOCERA ALT CAP,CER,X5R,4UF,20%,6.3V,0201,T=0.55MM
	155S0914	155S0897	ALT_CMN	ALL	<RDAR://44391467>	TDK PRIMARY, PANASONIC ALT FLTR,NOISE,2.4GHZ,0.1A,0.65X0.5MM,SMD4
	155S00190	155S0897	ALT_CMN	ALL	<RDAR://44391467>	TDK PRIMARY, TAIYO YUDEN ALT FLTR,NOISE,2.4GHZ,0.1A,0.65X0.5MM,SMD4
197S00053		197S00050	ALT_CMNALL		<RDAR://44391613>	TXC PRIMARY, KYOCERA ALT XTAL,24MHZ,10PPM,8PF,40 OHM,2520
197S00054		197S00050	ALT_CMNALL		<RDAR://44391613>	TXC PRIMARY, NDK ALT XTAL,24MHZ,10PPM,8PF,40 OHM,2520
	197S00055	197S00050	ALT_CMN	ALL	<RDAR://44391613>	TXC PRIMARY, MURATA ALT XTAL,24MHZ,10PPM,8PF,40 OHM,2520
	377S00079	377S00077	ALT_CMN	ALL	<RDAR://44391888>	ST MICRO PRIMARY, DIODES ALT TVS,DIODE,UNIDIR,22V,35A,1.6X1.0
	377S0077	377S0183	ALT_CMN	ALL	<RDAR://44392851>	INFINEON PRIMARY, ST ALT SUPPR,TRANS,BIDIR,5.5V,6.2PF,0201
	311S0271	311S00008	ALT_CMN	ALL	<RDAR://43955521>	DIODES PRIMARY, NXP ALT IC,74LVC1G08,SNGL 2-INPT AND GATE,DFN,6P
	311S00036	311S00097	ALT_CMN	ALL	<RDAR://43955649>	DIODES PRIMARY, NXP ALT IC,74LVC2G126,3-ST DUAL BFR,DFN1210-8
155S0694		155S0387	ALT_CMNALL		<RDAR://44363691>	TDK PRIMARY, MURATA ALT FERRITE BEAD,470OHM,0.1A,1.5MOHM DCR,060
	138S1103	138S0719	ALT_CMNALL		<RDAR://44325533>	MURATA PRIMARY, TY ALT CAP,CER,X5R,4.7UF,20%,10V,0402,MURATA
	138S0660	138S0684	ALT_CMN	ALL	<RDAR://44325201>	MURATA PRIMARY, TAIYO ALT CAP,CER,10UF,20%,10V,X5R,0603,MURATA
	311S00104	311S00091	ALT_CMN	ALL	<RDAR://44346512>	ON SEMI PRIMARY, TI ALT IC,NLSX4402,2BIT DUAL LEVEL XLATOR,DFN8
	107S00016	107S0118	ALT_CMN	ALL	<RDAR://44358912>	VISHAY PRIMARY, ROHM ALT RES,FILM,0.001 OHM,1W,1%,1206
	138S0914	138S00109	ALT_CMN	ALL	<RDAR://44363107>	KYOCERA PRIMARY, MURATA ALT CAP,X5R,2.2UF,20%,6.3V,0201,0.35MM,KYO
	138S00049	138S0831	ALT_CMN	ALL	<RDAR://44621837>	MURATA PRIMARY, KYOCERA ALT CAP,CER,X5R,2.2UF,20%,6.3V,0201
103S00250		103S00249	ALT_CMNALL		<RDAR://44623255>	MURATA PRIMARY, YAGEO ALT RES,TK,18.2 KOHM,0.1%,TOPPM,1/20W,0201
	103S00248	103S00247	ALT_CMNALL		<RDAR://44623345>	CYNTEC PRIMARY, YAGEO ALT RES,TK,8.06 KOHM,0.1%,50PPM,1/20W,0201
	376S1137	376S00019	ALT_CMN	ALL	<RDAR://44620634>	DIODES PRIMARY, VISHAY ALT XSTR,FET,N-CH,20V,4.5A,40MOHM,BGA4
	138S0750	138S00097	ALT_CMN	ALL	<RDAR://44622531>	TAYIO YUDEN PRIMARY, MURATA ALT CAP,CER,4.7UF,20%,6.3V,X6S,TY,0402
	107S00297	107S0085	ALT_CMN	ALL	<RDAR://44623001>	MURATA PRIMARY, TDK ALT THERMISTOR,NTC,100K OHM,1%,0.10MA,0201
	353S01346	353S01320	ALT_CMN	ALL	<RDAR://43953321>	NXP PRIMARY, ONSEMI ALT IC,NX3DV642,3-LANE HS SW,TPDT,XQFN24
197S00048		197S00036	ALT_CMNALL		<RDAR://44391564>	TXC PRIMARY, KYOCERA ALT XTAL,25MHZ,25PPM,20PF,50OHM,500UW,2016
376S00309		376S00074	ALT_CMNALL		<RDAR://44620855>	TOSHIBA PRIMARY, DIODES ALT MOSFET,DUAL N-CH30V,100MA,6P SOT563
	376S00332	376S00074	ALT_CMN	ALL	<RDAR://44620855>	TOSHIBA PRIMARY, NEXPERIA ALT MOSFET,DUAL N-CH30V,100MA,6P SOT563
	740S00028	740S0118	ALT_CMN	ALL	<RDAR://44393058>	[illegible] ALT FUSE,12A,32V,1206,FAST ACTING,SMD
	138S00056	138S1100	ALT_CMN	ALL	<RDAR://44319895>	MURATA PRIMARY, TAIYO ALT CAP,CER,3-TERM,9.1UF,20%,4V,H0.7MM,0402
	155S0665	155S00232	ALT_CMN	ALL	<RDAR://44363532>	TDK PRIMARY, MURATA ALT FERR BD,120 OHMZ,25%,480MA,0.21 OHM,0201
	197S00120	197S00118	ALT_CMN	ALL	<RDAR://44391668>	TXC PRIMARY, EPSON ALT XTAL,24MHZ,30PPM,9.5PF,60 OHM MAX,1612
311S00133		311S00130	ALT_CMNALL		<RDAR://44396487>	NXP PRIMARY, DIODES ALT IC,74AVC1T45,XCVR,DL SUPPLY,1BIT,SON-6
	107S00086	107S00056	ALT_CMNALL		<RDAR://44358149>	CYNTEC PRIMARY, TFT ALT RES,SENSE,0.003 OHM,1%,1/2W,0306-4T

SYSTEM EE

PART NUMBER	ALTERNATE FOR PART NUMBER	BOM OPTION	REF DES	COMMENTS:	
311S00121	311S0398	ALT_CMN	ALL	<RDAR://43152868>	NXP PRIMARY, DIODES ALT IC,74AUP1G08,2-INPUT AND GATE,SOT891
107S00100	107S00057	ALT_CMN	ALL	<RDAR://44358232>	CYNTEC PRIMARY, TFT ALT RES,MF,0.002 OHM,1%,1/2W,0306-4T
107S00033	107S00034 ALT_CMN		ALL <RDAR://44349741>		CYNTEC PRIMARY, TFT ALT RES,MF,0.025 OHM,1%,0612-4T,BLK
155S00067	155S00401 ALT_CMN		ALL <RDAR://44653410>		MURATA PRIMARY, TDK ALT FERR BD,240 OHM,25%,350MA,0.38 DCR,0201
138S0706	138S0739	ALT_CMN	ALL	<RDAR://44621676>	SAMSUNG PRIMARY, MURATA ALT CAP,CER,X5R,1UF,20%,10V,0201,SAMSUNG
138S0945	138S0739	ALT_CMN	ALL	<RDAR://44621676>	SAMSUNG PRIMARY, KYOCERA ALT CAP,CER,X5R,1UF,20%,10V,0201,SAMSUNG
152S00864	152S00851	ALT_CMN	ALL	<RDAR://44652690>	TDK PRIMARY, CYNTEC ALT IND,MULT,1.2UH,20%,120MA,1.17 OHM,0402
138S00181	138S0835	ALT_CMN	ALL	<RDAR://44621938>	MURATA PRIMARY, SAMSUNG ALT CAP,CER,3-TERM,4.3UF,20%,4V,0402
371S00185	371S00193	ALT_CMN	ALL	<RDAR://44610883>	ROHM PRIMARY, TOSHIBA ALT DIODE,SCHOTTKY,30V,100MA,0201
311S00196	311S00195 ALT_CMN		ALL <RDAR://46735900>		DIODES PRIMARY, NEXPERIA ALT IC,74LVC1G08,SNGL 2-INPT AND G,DFN1410-6
377S00123	377S00081 ALT_CMN		ALL <RDAR://44391823>		ON SEMI PRIMARY, SEMTECH ALT DIODE,TVS,5.5V,7.3VBR,0.2PF,0201
376S00292	376S00294	ALT_CMN	ALL	<RDAR://43910260>	DIODES PRIMARY, NEXPERIA ALT NFET,20V,1.35A,0.18 OHM,DFN3
107S00346	107S00116	ALT_CMN	ALL	<RDAR://46676880>	CYNTEC PRIMARY, YAGEO ALT RES,MF,0.10 OHM,1%,0.5W,150PPM,0603-4T

H9M

PART NUMBER PART NUMBER	ALTERNATE FOR	BOM OPTION	REF DES	COMMENTS:	
339S00387	339S00386	ALT_CMN	ALL	<RDAR://41988491>	MICRON SCK PRIMARY, HYNIX SCK ALT POP,GIBRALTAR+1GB,20NM,M,DEV,SCK,CSP1122
339S00390	339S00386	ALT_CMN	ALL	<RDAR://41988491>	MICRON SCK PRIMARY, MICRON ATK ALT POP,GIBRALTAR+1GB,20NM,M,DEV,SCK,CSP1122
339S00391	339S00386	ALT_CMN	ALL	<RDAR://41988491>	MICRON SCK PRIMARY, HYNIX ATK ALT POP,GIBRALTAR+1GB,20NM,M,DEV,SCK,CSP1122
339S00389	339S00388	ALT_CMN	ALL	<RDAR://41988491>	MICRON SCK PRIMARY, HYNIX SCK ALT POP,GIBRALTAR+2GB,20NM,M,DEV,SCK,CSP1122
339S00392388		ALT_CMN	ALL	<RDAR://41988491>	MICRON SCK PRIMARY, MICRON ATK ALT POP,GIBRALTAR+2GB,20NM,M,DEV,SCK,CSP1122
339S00393388		ALT_CMN	ALL	<RDAR://41988491>	MICRON SCK PRIMARY, HYNIX ATK ALT POP,GIBRALTAR+2GB,20NM,M,DEV,SCK,CSP1122
339S00602	339S00601	ALT_CMN	ALL	<RDAR://41988491>	MICRON SCK PRIMARY, HYNIX SCK ALT POP,GIBRALTAR_L+1GB,16NM,M,B0,SCK,C1122
339S00603	339S00601	ALT_CMN	ALL	<RDAR://41988491>	MICRON SCK PRIMARY, MICRON ATK ALT POP,GIBRALTAR_L+1GB,16NM,M,B0,SCK,C1122
339S00604	339S00601	ALT_CMN	ALL	<RDAR://41988491>	MICRON SCK PRIMARY, HYNIX ATK ALT POP,GIBRALTAR_L+1GB,16NM,M,B0,SCK,C1122
339S00606	339S00605	ALT_CMN	ALL	<RDAR://41988491>	MICRON SCK PRIMARY, HYNIX SCK ALT POP,GIBRALTAR_L+2GB,16NM,M,B0,SCK,C1122
339S00607	339S00605	ALT_CMN	ALL	<RDAR://41988491>	MICRON SCK PRIMARY, MICRON ATK ALT POP,GIBRALTAR_L+2GB,16NM,M,B0,SCK,C1122
339S00608605		ALT_CMN	ALL	<RDAR://41988491>	MICRON SCK PRIMARY, HYNIX ATK ALT POP,GIBRALTAR_L+2GB,16NM,M,B0,SCK,C1122

BACKLIGHT

PART NUMBER	ALTERNATE FOR PART NUMBER	BOM OPTION	REF DES	COMMENTS:	
138S0738	138S1101	ALT_CMN	ALL	<RDAR://42360480>	MURATA PRIMARY, SAMSUNG ALT CAP,CER,2.2UF,10%,100V,X5R,1206,T:0.95MM
138S0846	138S0811	ALT_CMN	ALL	<RDAR://42360480>	MURATA PRIMARY, SAMSUNG ALT CAP,CER,4.7UF,10%,25V,X6S,0603
376S1053	376S0604	ALT_CMN	ALL	<RDAR://42360480>	FAIRCHILD PRIMARY, DIODES ALT XSTR,FET,P-CH,20V,4.5A,0.043 OHM,SS0T6
152S00369253		ALT_CMN	ALL	<RDAR://42360480>	CYNTEC PRIMARY, CHILISIN ALT IND,PWR,MLD,15UH,20%,1.9A,240MO,7368X24M
740S00040S0159		ALT_CMN	ALL	<RDAR://42360480>	LITTLEFUSE PRIMARY, BOURNS ALT FUSE,HIGH INRUSH,32V,3A,0603
371S00077	371S00180	ALT_CMN	ALL	<RDAR://42360480>	DIOES PRIMARY, NXP ALT DIODE,SCHOTTKY,100V,2A,SOD123
376S1106	376S0678	ALT_CMN	ALL	<RDAR://42360480>	VISHAY PRIMARY, FAIRCHILD ALT XSTR,MSFT,N-CH,75V,16A,0.046 OHM

NAND

PART NUMBER PART NUMBER	ALTERNATE FOR	BOM OPTION	REF DES	COMMENTS:	
998-17335S00377		ALT_CMN	ALL	<RDAR://45028102>	HYNIX PRIMARY, HYNIX SUB X ALT NAND,3DV4,64GBT,S4E,256G,H,SLGA110
998-17176	335S00377	ALT_CMN	ALL	<RDAR://45028102>	HYNIX PRIMARY, HYNIX SUB Y ALT NAND,3DV4,64GBT,S4E,256G,H,SLGA110
998-16394	335S00393	ALT_CMN	ALL	<RDAR://45028102>	TOSHIBA PRIMARY, TOSHIBA SUB X ALT NAND,3DV4,64GBT,XXX,S4E,256G,T,SLGA110
998-16395	335S00393	ALT_CMN	ALL	<RDAR://45028102>	TOSHIBA PRIMARY, TOSHIBA SUB Y ALT NAND,3DV4,64GBT,XXX,S4E,256G,T,SLGA110
998-16396	335S00394	ALT_CMN	ALL	<RDAR://45028102>	TOSHIBA PRIMARY, TOSHIBA SUB X ALT NAND,3DV4,128GBT,XXX,S4E,256G,T,SLGA110
998-16397	335S00394	ALT_CMN	ALL	<RDAR://45028102>	TOSHIBA PRIMARY, TOSHIBA SUB Y ALT NAND,3DV4,128GBT,XXX,S4E,256G,T,SLGA110
998335S00395		ALT_CMN	ALL	<RDAR://45028102>	TOSHIBA PRIMARY, TOSHIBA SUB X ALT NAND,3DV4,192GBT,XXX,S4E,256G,T,SLGA110
998-16335S00395		ALT_CMN	ALL	<RDAR://45028102>	TOSHIBA PRIMARY, TOSHIBA SUB Y ALT NAND,3DV4,192GBT,XXX,S4E,256G,T,SLGA110
998-16400	335S00396	ALT_CMN	ALL	<RDAR://45028102>	TOSHIBA PRIMARY, TOSHIBA SUB X ALT NAND,3DV4,256GBT,S4E,256G,T,SUBX,SLGA110
998-16401	335S00396	ALT_CMN	ALL	<RDAR://45028102>	TOSHIBA PRIMARY, TOSHIBA SUB Y ALT NAND,3DV4,256GBT,S4E,256G,T,SUBY,SLGA110

WIFI

PART NUMBER PART NUMBER	ALTERNATE FOR	BOM OPTION	REF DES	COMMENTS:	
339S00628616		ALT_CMN	ALL	<RDAR://46651871>	MURATA PRIMARY, USI ALT MODULE,WIFI/BT,SAPPORO,ES3.1,M,LGA451

SYNC_MASTER=J213_JOHN SYNC_DATE=06/05/2018

PAGE TITLE

BOM ALTERNATES

Apple Inc.

DRAWING NUMBER 051-04273 SIZE D

REVISION 4.0.0

BRANCH evt-1

PAGE 410 OF 500

SHEET 97 OF 98

NOTICE OF PROPRIETARY PROPERTY:

THE INFORMATION CONTAINED HEREIN IS THE PROPRIETARY PROPERTY OF APPLE INC.
THE POSESSOR AGREES TO THE FOLLOWING:

I TO MAINTAIN THIS DOCUMENT IN CONFIDENCE
II NOT TO REPRODUCE OR COPY IT
III NOT TO REVEAL OR PUBLISH IT IN WHOLE OR PART
IV ALL RIGHTS RESERVED

Vinafix.com

RULER_RULE_SET=RIGID_2016 — MANUFACTURING CONFIGURATION — TABLE_REV_NUMBER=1

DIELECTRIC BASED SPACING RULES				DEFAULT SPACING MULTIPLES	VOID SPACE RATIO
MULTIPLES	SMDPIN MAX(UM)	MVIA MAX(UM)	SMDPIN2SMDPIN MAX(UM)		
1,2,3,4,5,6,7,8,9,10,11,12,13,14	120	120	100	1	2

	LAYERS	MINIMUM CU WIDTH RATIO	MINIMUM CU SPACING RATIO	MINIMUM TO DEFAULT RATIO
SIGNAL 1/3 OZ, PLATED TO 0.031 MM	TOP,BOTTOM	2.0	2.36842	1.2
GND PLANE 1/3 OZ, PLATED TO 0.020 MM	ISL2,ISL13	2.25	2.5	1.2
SIGNAL 1/3 OZ, PLATED TO 0.030 MM	ISL3,ISL12	2.0	2.25806	1.2
GND PLANE 1/2 OZ, 0.016 MM	ISL4,ISL11	2.5	2.5	1.2
SIGNAL 1/2 OZ, 0.016 MM	ISL5,ISL10	2.5	2.5	1.2
GND PLANE 1/2 OZ, 0.016 MM	ISL6,ISL9	2.5	2.5	1.2
POWER PLANE 1 OZ, 0.031 MM	ISL7,ISL8	2.0	2.25806	1.2

MANUAL EDITS AFTER AUTOGENERATION:
OVERWROTE THROUGH VIA, BB VIA, AND UVIA SPACINGS TO DEFAULT VALUE, THE AUTOGEN ONES ARE TOO HIGH
UPDATE SAME NET SPACING FOR VIA TO HOLE, UVIA TO SMD PIN, FOR DEFAULT AND MIN, TO -1
CHANGED LINE TO SMD SAME NET SPACING FROM 0.1 TO 0.07 ON TOP/BOTTOM LAYERS
CHANGED MAX NECK LENGTH FOR THE DEFAULT PHYSICAL RULE TO 20MM
CHANGED UVIA TO LINE SAME NET SPACING TO 0.05
CHANGED BB VIA TO LINE, ABD BB VIA TO BB VIA SAME NET SPACING TO 0.0
CHANGED BB VIA TO UVIA SAME NET SPACING TO -1
CHANGED LINE TO SHAPE SAME NET SPACING TO 0.05
SET BB VIA STAGGER IN PHYSICAL RULES TO 0.2500 FOR MIN, 0.275 FOR ALL OTHER, FOR LAYERS 3 AND 12
COPIED THE RULES FROM 85 OHM DIFF TO 85 MIN STAGGER
SET ENABLE DRC BY LAYER IN SAME NET SPACING TO TRUE FOR ALL LAYERS
KEEP DEFAULT AS DEFAULT, GENERIC DP AS GENERIC DP
REPLACING ALL SPACINGS EXCEPT LINE TO LINE WITH DEFAULT VALUES
DECREASED NECK GAP FOR DIFF PAIRS TO VALUE FOR GENERIC DP
REASSIGN SPACING AND PHYSICAL REGION RULES AND NET CLASS ASSIGNMENTS
SET UVIA TO SHAPE SAME NET SPACING TO 0.1MM ON TOP/BOTTOM

SYNC_MASTER=J213_JOHN — SYNC_DATE=06/05/2018

PAGE TITLE: BOARD RULES

Apple Inc.

DRAWING NUMBER: 051-04273 — SIZE: D

REVISION: 4.0.0

BRANCH: evt-1

PAGE: 500 OF 500

SHEET: 98 OF 98

NOTICE OF PROPRIETARY PROPERTY:
THE INFORMATION CONTAINED HEREIN IS THE PROPRIETARY PROPERTY OF APPLE INC.
THE POSESSOR AGREES TO THE FOLLOWING:
I TO MAINTAIN THIS DOCUMENT IN CONFIDENCE
II NOT TO REPRODUCE OR COPY IT
III NOT TO REVEAL OR PUBLISH IT IN WHOLE OR PART
IV ALL RIGHTS RESERVED